SONARtrac™

MODEL VF & GVF-100 FLOW and ENTRAINED GAS MONITORING SYSTEM

INSTALLATION & STARTUP MANUAL

CiDRA Corporation
Tel. 203-265-0035

50 Barnes Park North
Fax. 203-294-4211

Wallingford, CT 06492
www.cidra.com

Table of Contents

1 INTRODUCTION 1-1
1.1 Sensor Head Description and Function 1-1
1.2 Transmitter Description and Function 1-1
2 INTELLECTUAL PROPERTY NOTICES 2-1
3 EQUIPMENT SAFETY COMPLIANCE 3-1
3.1 Safety 3-1
3.2 North American Emissions 3-1
3.3 European Emissions and Immunity 3-1
3.4 CE Marking 3-2
4 WARRANTY 4-1
5 GENERAL SAFETY GUIDELINES 5-1
5.1 Introduction 5-1
5.2 Safety Precautions 5-1
5.3 Definitions of Symbols 5-1
5.3.1 General Warning or Caution 5-2
5.3.2 Grounding 5-2
5.3.3 On 5-2
5.3.4 Off 5-2
5.3.5 General Warnings 5-3
5.3.6 General Cautions 5-4
6 UNPACKING AND PARTS LIST 6-1
6.1 Unpacking 6-1
6.2 Inventory of Parts 6-1
6.3 Class I, Division 2 Labels 6-2
7 SENSOR INSTALLATION 7-1
7.1 Class I, Division 2, Groups A, B, C, and D Rated Equipment 7-1
7.2 Tools Required For Installation 7-1
7.3 Sensor Installation Guidelines 7-2
7.4 Process Piping Considerations 7-2
7.4.1 Pipe Preparation 7-2
7.4.2 Determine the Pipe Inner Diameter (ID) 7-3
7.5 Sensor Band Installation 7-4
7.5.1 Sensor Band Short Test 7-8
7.6 Sensor Cover Installation 7-9
7.6.1 Fiberglass Cover Installation 7-10
7.6.2 Stainless Steel Cover Installation 7-13
7.6.3 Sensor Assembly Cable Connection 7-17
7.6.4 Rain Boot Installation 7-18
7.6.5 Sensor Calibration Label 7-18
7.7 Sensor to Transmitter Cable Connections 7-20
7.7.1 Sensor End Cable Attachment 7-20
7.8 Installations on Tubing 7-21
8 TRANSMITTER INSTALLATION 8-1
8.1 Transmitter Power Requirements 8-1
8.2 Transmitter Environmental Conditions 8-1
8.3 Transmitter Mounting Instructions 8-1
8.3.1 Bulkhead Mounting 8-2
8.3.2 Pipe Mounting 8-2
8.4 Transmitter Cable Connections 8-3

Copyright © 2006 CiDRA Corporation

8.4.1 Transmitter Housing Cable Entry 8-3
8.4.2 Transmitter Output, Sensor and Sensor Head Connections 8-4
8.4.3 Transmitter Electrical Power Cable Installation 8-10
8.4.4 Sensor Calibration Label 8-12
9 TRANSMITTER FUNCTIONS 9-1
9.1 Transmitter Layout 9-1
9.2 Transmitter Output Definitions 9-2
9.3 Transmitter Input Definitions 9-6
9.4 Keypad 9-7
9.5 Transmitter Display 9-8
9.5.1 Operational Mode 9-8
9.5.2 Menu Mode 9-12
10 TRANSMITTER SETUP 10-1
10.1 Transmitter Menus 10-1
10.1.1 Basic Config Menu 10-1
10.1.2 Output Config Menu 10-3
10.1.3 Input Config 10-13
10.1.4 Customize Menu 10-13
10.1.5 Communications Menu 10-15
10.1.6 Diagnostics Menu 10-15
10.1.7 Info Menu 10-17
10.2 Resetting Processor 10-18
10.3 Resetting to Factory Defaults 10-19
11 TRANSMITTER STARTUP & OPERATION 11-1
11.1 Initial Start-up 11-1
11.1.1 Initial Setup 11-1
12 TRANSMITTER USB PORT 12-1
12.1 USB Port File Naming Convention 12-3
12.2 Save Snapshot 12-4
12.3 Load Configuration 12-4
12.4 Advanced Functions 12-5
13 SENSOR REMOVAL PROCEDURE 13-1
Appendix A *SONARtrac*™ VF & GVF-100 SPECIFICATIONS A-1
Appendix B *SONARtrac*™ EC DECLARATION OF CONFORMITY B-1
Appendix C SYSTEM CONTROL DRAWING *SONARtrac*™, NON-INCENDIVE C-1
Appendix D MATERIAL SAFETY DATA SHEETS D-1
Appendix E CONVERSION FACTORS E-1
Appendix F PHYSICAL PROPERTIES OF WATER F-1
Appendix G END USER LICENSE AGREEMENT G-1
Appendix H SPARE PARTS LIST H-1
Appendix I DIRECTIVE 2002/96/EC ON WASTE ELECTRICAL AND ELECTRONIC EQUIPMENT (WEEE) I-1

Copyright © 2006 CiDRA Corporation

List of Figures

Figure 1 General Warning or Caution Symbol 5-2
Figure 2 Grounding Symbol 5-2
Figure 3 On Symbol 5-2
Figure 4 Off Symbol 5-2
Figure 5 Class I Division 2 Label Information 6-2
Figure 6 Sensor Band Screw and Alignment Pins 7-4
Figure 7 Sensor Band Screw Tightening Sequence 7-5
Figure 8 Sensor Band Screw Assembly 7-6
Figure 9 Sensor Band Spacer Tool 7-6
Figure 10 Sensor Band Spacing Tool Installed on Sensor Screw 7-7
Figure 11 Installed Sensor Band 7-8
Figure 12 Upper Sensor Cover Assembly Outside View 7-9
Figure 13 Upper Sensor Cover Assembly Inside View 7-9
Figure 14 Orientation (Clocking) of Sensor Cover 7-10
Figure 15 Sensor Cover Bolt Installation 7-11
Figure 16 Sensor Cover Bolt Tightening Sequence 7-12
Figure 17 Stainless Steel Cover Assembly 7-13
Figure 18 Applying GelTek to Gasket Edge 7-14
Figure 19 Boot Gasket Band Kit 7-14
Figure 20 Boot Gasket Band Installation 7-14
Figure 21 Splice Protector Plate Installation 7-15
Figure 22 BAND-IT® Model C001 Tool Use 7-15
Figure 23 Final Alignment and Securing of Gasket Band 7-16
Figure 24 Band Termination 7-16
Figure 25 Boot Gasket Fender Assembly 7-17
Figure 26 Sensor Assembly Cable Installation 7-17
Figure 27 Sensor Calibration Label 7-19
Figure 28 Elastomeric Strip Installation on Tubes 7-21
Figure 29 Bulkhead Mount Hole Pattern 8-2
Figure 30 Pole Mount Kit 8-2
Figure 31 Power and Signal Interconnects 8-3
Figure 32 Transmitter Housing Cable Gland Holes 8-3
Figure 33 Terminal Board Layout 8-4
Figure 34 Transmitter Output Terminals 8-5
Figure 35 Transmitter Sensor Terminals 8-6
Figure 36 Sensor Head to Transmitter Cable Connection Terminals 8-7
Figure 37 Armored Cable Stiffener Plate Installation 8-8
Figure 38 Removal of Cable Armor 8-9
Figure 39 Armored Cable Connector Installed 8-9
Figure 40 Armored Cable Installation 8-10
Figure 41 Transmitter Power Connection 8-11
Figure 42 Sensor Calibration Label 8-12
Figure 43 Transmitter Layout 9-1
Figure 44 Transmitter Output Terminals 9-2
Figure 45 Pulse Switch Closure 9-3
Figure 46 Alarm Switch Closure 9-3
Figure 47 Internally (Transmitter) Powered 4–20mA Loop 9-4
Figure 48 Externally Powered 4–20mA Loop 9-5
Figure 49 Transmitter Sensor Terminals 9-6

Copyright © 2006 CiDRA Corporation

Figure 50 Transmitter Front Panel Keyboard 9-7
Figure 51 VF & GVF Startup Screen 9-8
Figure 52 Operating Transmitter Display 9-9
Figure 53 Initialization Mode 9-12
Figure 54 GVF Measurement Screen 9-12
Figure 55 Typical Menu Screen 9-14
Figure 56 Editing Parameter By Digits 9-14
Figure 57 Editing Whole Parameter 9-15
Figure 58 Low End Output Configuration Example Screen 10-4
Figure 59 High End Output Configuration Example Screen 10-4
Figure 60 4-20mA Output Set to 0 – 30 fps 10-5
Figure 61 4-20mA Trim Message box 10-6
Figure 62 Speed Of Sound and Gas Volume Fraction Pulse Output 10-8
Figure 63 Total Flow Pulse Output 10-8
Figure 64 Test Passes Display Example 10-15
Figure 65 Test Failed 10-15
Figure 66 Error Codes Listed in Event Log 10-18
Figure 67 Sensor Max/Min Display 10-18
Figure 68 System Start Display 11-1
Figure 69 Sensor Cable Connector Removal 13-1

List of Tables

Table 1 SONARtrac™ VF & GVF-100 Parts List 6-1
Table 2 Installation Tools For SONARtrac™ VF & GVF-100 Monitoring System 7-1
Table 3 Recommended Distances From Flow Disturbances 7-2
Table 4 Gauge Block and Screw Size 7-5
Table 5 List of Transmitter Signal Outputs 8-5
Table 6 Sensor to Transmitter Cable Terminal Connections 8-8
Table 7 Keypad Functions in Operational and Menu Modes 9-7
Table 8 Line 1 and Line 2 Values 9-9
Table 9 Status Line Code 9-9
Table 10 Status Line Messages 9-10
Table 11 Quality Message Definitions 9-10
Table 12 Mode Message Definitions 9-11
Table 13 SONARtrac™ VF & GVF-100 Menu Diagram Software Release 03.03.XX 9-13
Table 14 Transmitter Menu Tree Software Release 03.03.XX 9-16
Table 15 Maximum Pulse Per Second Based On Pulse Width 10-7
Table 16 Alarm Triggers 10-10
Table 17 Transmitter Setup 11-7
Table 18 USB Port Menu 12-2
Table 19 USB Port File Naming Convention 12-3
Table 20 USB Port File Name Examples 12-3

Copyright © 2006 CiDRA Corporation

1 INTRODUCTION

The CIDRA Corporation *SONARtrac*™ Model VF & GVF-100 (Volumetric Flow and Gas Volume Fraction) System is a clamp-on process monitoring system used to measure the volumetric flow rate and the amount of entrained air / gas (also referred to as gas volume fraction or GVF) contained in a fluid within process pipes on a real-time basis. The *SONARtrac*™ VF & GVF-100 utilizes patented array processing techniques to listen to and interpret the flow turbulence generated by fluid flow and the acoustic field generated by machinery, piping and flow present in process flow. The clamp-on design eliminates the need for cutting pipe or interrupting process flow during installation.

The *SONARtrac*™ VF & GVF-100 consists of a common transmitter and sensor heads sized for different pipe diameters.

SONARtrac™ flow and entrained gas meters certified for use in hazardous areas are rated for use in Class I, Division 2, Groups A, B, C, and D environments (per US and Canadian standards).

This manual covers the basic installation and setup of the *SONARtrac*™ Model VF & GVF-100 Monitoring System. In all cases, local safety and operating practices take precedence over the information contained within this document.

For additional information, contact your local sales agent or CiDRA Corporation Customer Support by telephone at 1-877-243-7277 (1-877-CIDRA77) or by E-Mail at customersupport@cidra.com

1.1 Sensor Head Description and Function

The *SONARtrac*™ sensor head contains no moving parts. The sensor head includes a sensor band and a fiberglass or stainless steel cover assembly to protect the sensor band. The sensor band is wrapped around and clamped onto the process pipe. A multi-conductor cable electrically connects the sensors to an electronic module mounted in the cover assembly. Signals from the electronic module exit through a NEMA 4X rated connector mounted to the outer surface of the cover assembly.

1.2 Transmitter Description and Function

The *SONARtrac*™ transmitter receives electrical signals from the sensor head. The signals are processed using *SONARtrac*™ array processing firmware that displays the calculated results on an integral LCD screen. Results can also be transmitted using the 4–20mA analog output, pulse output, alarm output or the RS-485/232 digital

Copyright © 2006 CiDRA Corporation

output. The electronic assembly is housed in a rugged NEMA 4X enclosure.

Copyright © 2006 CiDRA Corporation

2 INTELLECTUAL PROPERTY NOTICES

CiDRA Corporation's Process Monitoring Products may be covered by one or more of the following granted U.S. Patent(s): 6,354,147, 6,587,798, 6,609,069, 6,435,030, 6,691,584, 6,732,575, 6,782,150, 6,862,920, 6,889,562, 6,732,150. Other patents are pending; see www.cidra.com for the latest listing of patents.

This manual is covered by U.S. and international copyright laws. No part of this manual may be reproduced, modified or transmitted in whole or in part in any form or by any means, electronic or mechanical, including photocopy, recording, or any information storage and retrieval system, without permission in writing from CiDRA Corporation.

Third party end-user license agreements ("EULA") are provided in Appendix G of this document.

Copyright © 2006 by CiDRA Corporation, all rights reserved.

*SONARtrac, SONAR*stick and logo are trademarks of CiDRA Corporation.

3 EQUIPMENT SAFETY COMPLIANCE

3.1 Safety

This equipment is listed with TÜV Rheinland of North America, Inc., a nationally recognized testing laboratory, and certified for ordinary location use per the following US, Canadian, and European standards: UL 61010A-1, CSA C22.2 No. 1010, and EN 61010-1:2001.

If so marked, this equipment is certified by Underwriters Laboratories for use in areas that - *under fault conditions* - include explosive gas atmospheres as defined by Class I, Division 2, Groups A, B, C, and D per compliance with these US and Canadian standards: UL 1604, UL 508, CSA C22.2 No. 213, and CSA C22.2 No. 142.

3.2 North American Emissions

This equipment is compliant with Class A limits for radiated and conducted radio noise emissions, as defined in Subpart A of Part 15 of the FCC rules, as well as the requirements defined in ICES-003 for Canada.

This Class A digital apparatus complies with Canadian ICES-003.

Cet appareil numérique de la classe A est conforme à la norme NMB-003 du Canada.

3.3 European Emissions and Immunity

This equipment is compliant with the requirements set forth in EN 61326-1:1997, *Electrical Equipment for Measurement, Control and Laboratory Use - EMC requirements* as well as EN 55011:1998 *Industrial, Scientific, and Medical (ISM) Radio Frequency Equipment - Radio Disturbance Characteristics - Limits and Methods of Measurement*.

For the purpose of Electromagnetic Compatibility (EMC) requirements, this product is categorized as Group 1, Class A ISM equipment. This categorization applies to Industrial, Scientific or Medical equipment that intentionally generates or uses conductively coupled (but not intentionally radiated) radio-frequency energy that is necessary for the internal functioning of the equipment. The level of EMC compliance is consistent with industrial use but not for domestic purposes.

CAUTION

Class A equipment is intended for use in an industrial environment. There may be potential difficulties in ensuring electromagnetic compatibility in other environments, due to conducted as well as radiated disturbances.

Copyright © 2006 CiDRA Corporation

3.4 CE Marking

This equipment is CE marked for ordinary location use and complies with the following European Directives:
73/23/EEC Low-Voltage Directive
89/336/EEC EMC Directive

Further details are listed in the EC Declaration of Conformity (P/N 20634-01), a copy of which can be found in Appendix B of this Document as well as on our website at http://www.cidra.com.

Copyright © 2006 CiDRA Corporation

4 WARRANTY

The terms and conditions, including warranty, of the purchase of CiDRA's Process Monitoring Products is outlined in the document entitled "CiDRA's Terms and Conditions of Sale".

Copyright © 2006 CiDRA Corporation

5 GENERAL SAFETY GUIDELINES

CiDRA Corporation recommends the installer fully read this manual prior to installing and operating the *SONARtrac*™ system.

Note: *Items that pertain to systems rated for Class I, Division 2, Groups A, B, C, and D operation are highlighted in italic print.*

5.1 Introduction

This manual is intended to be a general installation guide for the CiDRA *SONARtrac*™ VF & GVF-100 System. It is not intended to cover the installation details for every process due to the wide variety of applications and processes on which the system can be used. In all cases, local safety and operating practices should take precedence over instructions contained within this manual.

5.2 Safety Precautions

The following style of Warnings and Cautions are used throughout the manual to draw attention to information regarding personnel safety and equipment care. They are not intended to replace local or plant safety procedures.

WARNING

Situation has the potential to cause bodily harm or death.

CAUTION

Situation has the potential to cause damage to property or equipment.

5.3 Definitions of Symbols

The following terms and symbols are used in this document and on the *SONARtrac*™ system where safety related issues occur.

Copyright © 2006 CiDRA Corporation

5.3.1 General Warning or Caution

Figure 1 General Warning or Caution Symbol

The Exclamation Symbol in Figure 1 appears in Warning and Caution tables throughout this document. This symbol designates an area where personal injury or damage to the equipment is possible.

5.3.2 Grounding

Figure 2 Grounding Symbol

The Grounding Symbol in Figure 2 appears on labels affixed to the *SONARtrac*™ system. This symbol identifies a terminal intended for connection to an external (ground) conductor for protection against electric shock in case of a fault, or the terminal of a protective earth (ground) electrode.

5.3.3 On

Figure 3 On Symbol

The On Symbol in Figure 3 represents the Power ON condition of the power switch on the *SONARtrac*™ system, if so equipped.

- *Class I, Division 2 rated systems do not have this switch.*

5.3.4 Off

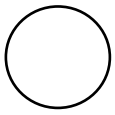

Figure 4 Off Symbol

The Off Symbol in Figure 4 represents the Power Off condition of the power switch on the *SONARtrac*™ system, if so equipped.

- *Class I, Division 2 rated systems do not have this switch.*

Copyright © 2006 CiDRA Corporation

5.3.5 General Warnings

Observe these general warnings when operating or servicing this equipment:

- Prior to operation of this equipment, personnel should read the instruction manual thoroughly.
- For systems installed in Class I, Division 2 areas, *Power Entry and Inputs/Outputs must be installed in accordance with Article 501.10(B)(1) of the National Electrical Code ANSI/NFPA 70:2005*.
- For systems installed in Class I, Division 2 areas, *Sensor Head Cable must be installed in accordance with Article 501.10(B)(3) of the National Electrical Code ANSI/NFPA 70:2005.*
- Only equipment rated for *Class I, Division 2, Groups A, B, C, and D should be installed in those areas. Verify the system rating on the equipment labels (refer to Section 6.3 of this manual)*.
- *Use a damp cloth to wipe sensor band cover and transmitter when installed in Class I, Division 2 areas to dissipate potential static charge buildup.*

WARNING

Using a dry cloth to clean the transmitter enclosure can cause static discharge, which could result in an explosion in an explosive atmosphere. Always use a damp cloth to clean the transmitter enclosure.

- If the sensor band was shipped with a sensor band shorting plug installed on the sensor band to preamplifier cable connector, ensure the sensor band shorting plug is installed on the sensor band cable prior to installing sensor band. Sensors bands with an 'R" in the Part Number suffix (e.g. Part #: 20686-26-R) do not require a shorting plug.
- *As for any electrical equipment in Class I, Division 2 installations wherein explosive atmospheres might be present, it is especially important to de-power and remove the SONARtrac™ meter from service if its appearance or operating behavior indicates that it is damaged or malfunctioning and/or that its safety features have been otherwise compromised.*
- Trained personnel must carry out service on this equipment.
- Follow all warnings on the unit and in the operating instructions.
- This equipment is grounded through the grounding conductor of the power cord.

Copyright © 2006 CiDRA Corporation

- Ensure all power cords, sensor to transmitter cable and signal cables are properly routed to eliminate damage to them. Cable conduit may be desirable to minimize potential damage.
- Prior to servicing, lockout all electrical power sources.
- Care should be taken when using the operator keypad to avoid touching any electrical connection or contact points.
- Do not wear rings or wristwatches when servicing this equipment.
- Use only the specified fuse(s) with the correct type number, voltage and current ratings as referenced in the appropriate locations in the service instructions or on the equipment.

5.3.6 General Cautions

Observe these cautions when operating or servicing this equipment:

- Read the instructions for proper input voltage range selection.
- There are no user serviceable parts inside the *SONARtrac*™ sensor band. Modification or disassembly may void the system warranty.
- Disconnect power to transmitter prior to replacing fuse(s).
- Use only CiDRA specified replacement parts.
- Follow static sensitive device precautions when servicing.
- This product should only be powered as described in the manual.
- Do not run power and signal wires in a common conduit.

Copyright © 2006 CiDRA Corporation

6 UNPACKING AND PARTS LIST

6.1 Unpacking

The *SONARtrac*™ VF & GVF-100 will typically be packaged in three shipping containers. One box will contain the sensor band and sensor cover assemblies, and installation hardware; the second box will contain the transmitter assembly and installation hardware; and the third box will contain the sensor to transmitter cable assembly.

Note: Cidra Corp. recommends the original packing materials be saved in the event that the system is removed or relocated.

CAUTION

Use care in unpacking and transporting system. Improper handling may result in damage to system components.

Whenever possible use the original packing materials to transport the system to the installation site to minimize the likelihood of damage.

WARNING

Static discharge may occur when handling sensor band and packing material. Remove from packing materials when entering hazardous areas. Always keep the sensor band shorting plug installed until sensor band is installed on the process pipe.

6.2 Inventory of Parts

Table 1 lists the parts contained in the shipping containers.

Description
SONARtrac™ VF & GVF-100 Gas Volume Fraction Process Monitoring System
Sensor Head Cable
Installation Hardware
Sealant, Joint and Thread, PTFE Paste, 3.5 oz Tube – included with fiberglass sensor cover assemblies
Gauge, Spring Gap (used for sensor installation) - included with sensor band assembly
Model VF & GVF-100 Flow and Entrained Air Process Monitoring System Installation & Startup Manual
Kit, Parts, Pole Mounting (Option)
Sensor Rain Guard Kit for vertical installations (Option)

Table 1 SONARtrac™ VF & GVF-100 Parts List

Copyright © 2006 CiDRA Corporation

6.3 Class I, Division 2 Labels

Transmitters and sensor covers rated for use in Class I, Division 2 areas are labeled with the following information (or a subset of it) so they can be identified for use in those areas.

Telemetering Equipment For Use in Hazardous Locations

Class I, Division 2, Groups A, B, C, and D Hazardous Locations Providing Nonincendive Field Circuits When Connected Per DWG # 20332-01

c UL us
LISTED
86BE

Figure 5 Class I Division 2 Label Information

WARNING

Use of non- Class I, Division 2 rated equipment in Class I, Division 2 areas may result in a fire or explosion.

7 SENSOR INSTALLATION

7.1 Class I, Division 2, Groups A, B, C, and D Rated Equipment

- *Equipment so marked is suitable for use in Class I, Division 2, Groups A, B, C, and D or non-hazardous locations only.*
- *WARNING – EXPLOSION HAZARD – Do not disconnect equipment unless power has been removed or the area is known to be non-hazardous.*
- *WARNING – EXPLOSION HAZARD –Substitution of components may impair suitability for Class I, Division 2.*
- *WARNING – EXPLOSION HAZARD –Do not replace fuses unless power has been switched off or the area is known to be non-hazardous.*
- *WARNING – EXPLOSION HAZARD –Ensure a sensor band shorting plug is installed on the sensor band cable connector during installation and removal from process pipe.*

7.2 Tools Required For Installation

The following tools are required for system installation. Additional tools may be required based on particular installation needs.

Required Tools	Recommended Tools
Cable cutter	Wire number markers
Wrenches, 1/2 “x 9/16”, combination, open-end, 2 ea	Portable electric screw driver with 7/64 or 5/32-inch hex driver bit
Wire strippers for 20 gauge wire	Open end or combination wrench set
Allen wrench or hex driver, 7/64-inch for No. 6 socket head cap screw, or 5/32-inch for No. 10 socket head cap screw	Spring clamps to hold cover halves in place temporarily
Spacer tool, sensor fastener (provided with sensor band)	Cable jacketing removal tool
Screw drivers, Blade, 3/16” and 1/4”, Phillips medium blade	Hacksaw and or armor cutter (armored cable cutting)
14” Adjustable wrench (armored cable)	Socket wrench set
Sandpaper, cleaning rags, etc as required for pipe cleaning	Volt-ohm meter
BAND-IT® Tool Model C001 (or equivalent) for use with stainless steel covers. Refer to www.band-it-idex.com for distributor information.	Electricians tape

Table 2 Installation Tools For SONARtrac™ VF & GVF-100 Monitoring System

Copyright © 2006 CiDRA Corporation

7.3 Sensor Installation Guidelines

The following are general installation guidelines and recommendations for installing a *SONARtrac*™ sensor.

- Where necessary, get a Hot Work Permit prior to installation of system.
- Select locations with well-developed flow profiles.
- Avoid installation locations directly after piping configurations that cause flow jetting.
- Install flow sensor upstream of control valves, “T”s, orifice plates, and any other severe source of flow disturbance.
- Locate the sensor upstream of pipe taps such as those used for temperature and pressure sensors.
- Good piping practices are required near flanges. This includes good alignment of pipes, and properly sized and installed gaskets that do not disturb the flow profile.
- Contact your local distributor or CiDRA Technical Support if you have questions.

Table 3 lists the recommended installation distances from flow disturbances. These recommendations apply to flow measurement installations.

Feature	Upstream pipe diameters	Downstream pipe diameters
90 Degree Elbow	15	5
Double Elbow in plane	25	5
Double Elbow out of plane	40	5
Diffuser (expansion)	30	5
Reducer	15	5
Control Valve	40	10
Flange	2	2

Table 3 Recommended Distances From Flow Disturbances

7.4 Process Piping Considerations

The *SONARtrac*™ sensor head assembly mounts on the process pipe. There is no need for breaking any process connections or for shutting down the process. The sensor head must be installed in a location that ensures a full pipe during operation.

7.4.1 Pipe Preparation

Remove pipe insulation if it is present.

Copyright © 2006 CiDRA Corporation

	WARNING **Asbestos containing insulation materials may be present. Asbestos fibers have been known to cause health problems. If unsure of the contents of pipe insulation materials contact the plant representative for that area.**
	WARNING **Process Heating Tapes may be present. This may present an electrical shock hazard. Follow plant Lock-out / Tag-out requirements.**
	WARNING **Process pipes may be hot. A burn hazard may exist. Use care when working with hot pipes.**

Clean pipe surface using a scraper, sand paper strips, a water (or solvent for greasy pipes) rinse and final wipe with a clean rag. The pipe surface under the sensor band assembly should be clean and free of rust and rust spots, grit, grease, protruding weld spots and weld splatter. A good guideline is to clean the pipe as if it were going to be painted.

Avoid dents as they can create flow disturbances within the pipe. Select a location that ensures full contact between the sensor and the pipe.

Painted surfaces are normally satisfactory provided they are smooth and free of chips over 0.25-inch (6.4 mm) diameter. Ensure a smooth painted finish by sanding the area where the sensor will be mounted. Finally, wipe the pipe using a damp cloth rag or paper towel.

7.4.2 Determine the Pipe Inner Diameter (ID)

Record the nominal pipe size based on the pipe size and pipe schedule, as this will be input into the transmitter.

Alternatively, measure and calculate the pipe ID. Accurately measure the pipe outside diameter (OD). Use an ultrasonic thickness measurement gauge to determine the wall thickness (t_w) at a minimum of 4 locations equally spaced around the pipe and average the measurements. Calculate the pipe inner diameter ($ID = OD – (2t_w)$). (There are several vendors of ultrasonic thickness gauges.)

Note: The accuracy of the pipe inner diameter measurement is critical for high accuracy flow rate measurements as there is a direct correlation between this measurement and the reported flow rate.

Copyright © 2006 CiDRA Corporation

7.5 Sensor Band Installation

It will be helpful to have a second person available to assist with holding the sensor assembly in position during installation.

Note: Prior to installing the sensor band, remove and save the plastic bag from the sensor band that contains two sensor calibration factor labels. These will be used as described later in this manual for input to the transmitter.

Ensure there is no dirt or other foreign material on the sensor assembly. Remove dirt or foreign matter using a clean cloth dampened with water.

If the sensor band was shipped with a sensor band shorting plug installed on the sensor band to preamplifier cable connector, ensure the sensor band-shorting plug is installed on the sensor band cable prior to installing sensor band. Sensors bands with an 'R" in the Part Number suffix (e.g. Part #: 20686-26-R) do not require a shorting plug.

Position the *SONARtrac*™ sensor band assembly on the pipe with the polyimide film (amber colored) against the pipe surface. If possible, orient the flow direction arrow on the sensor assembly with the direction of flow within the pipe. **Note:** If this is not possible due to installation constraints, e.g. access to sensor fasteners, install opposite to flow direction.

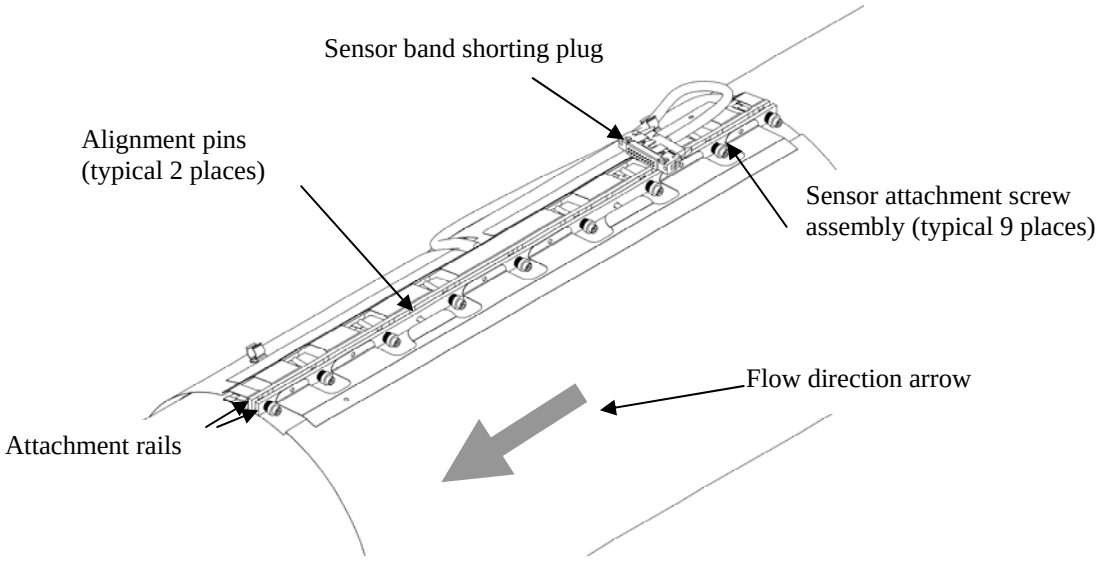

Figure 6 Sensor Band Screw and Alignment Pins

Copyright © 2006 CiDRA Corporation

Wrap the sensor band around the pipe and slide the alignment pins on the attachment rail through their mating holes on the opposite attachment rail. If the process pipe has a welded seam, align the gap between the sensor attachment rails along the pipe weld seam. Final positioning can be made after the sensor screws have been started. **Note:** When installing the sensor band keep in mind the requirement for transmitter connector socket assembly orientation as described in Section 7.6. If necessary, due to cover installation constraints, wrap the sensor band over the weld seam.

Carefully start threading the screws into their screw holes (avoid cross threading) by using the hex driver until each screw is engaged about 2 turns. Once all screws are engaged make final positioning of the sensor assembly with respect to pipe weld seam or desired orientation on the pipe. The following table provides guidance for selecting the proper hex tool and spacer gauge.

Sensor Band P/N	Spacer Gauge P/N	Socket Head Screw Hex Size (inch)	Band Attachment Rail Size (Ref)
20380- ALL SIZES	20143-01	7/64	1/8 x 3/8
20409- ALL SIZES	20143-02	7/64	1/8 x 3/8
20690- ALL SIZES	20143-04	5/32	1/4 x 1/2
20686- ALL SIZES	20143-04	5/32	1/4 x 1/2

Table 4 Gauge Block and Screw Size

Start with the center most screw and tighten screws, alternating from side to side, 3 - 4 turns at a time. Refer to the following figure for the screw tightening sequence. **Note:** Repeat the tightening sequence only until the Belleville disc springs on the screws begin to compress. The sensor screw stack up assembly is illustrated in Figure 8.

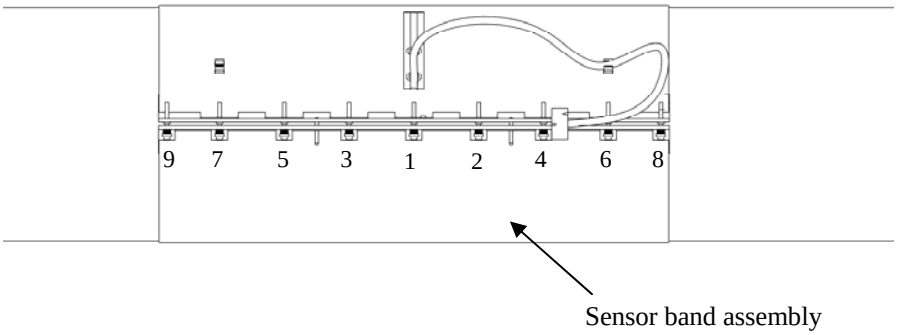

Figure 7 Sensor Band Screw Tightening Sequence

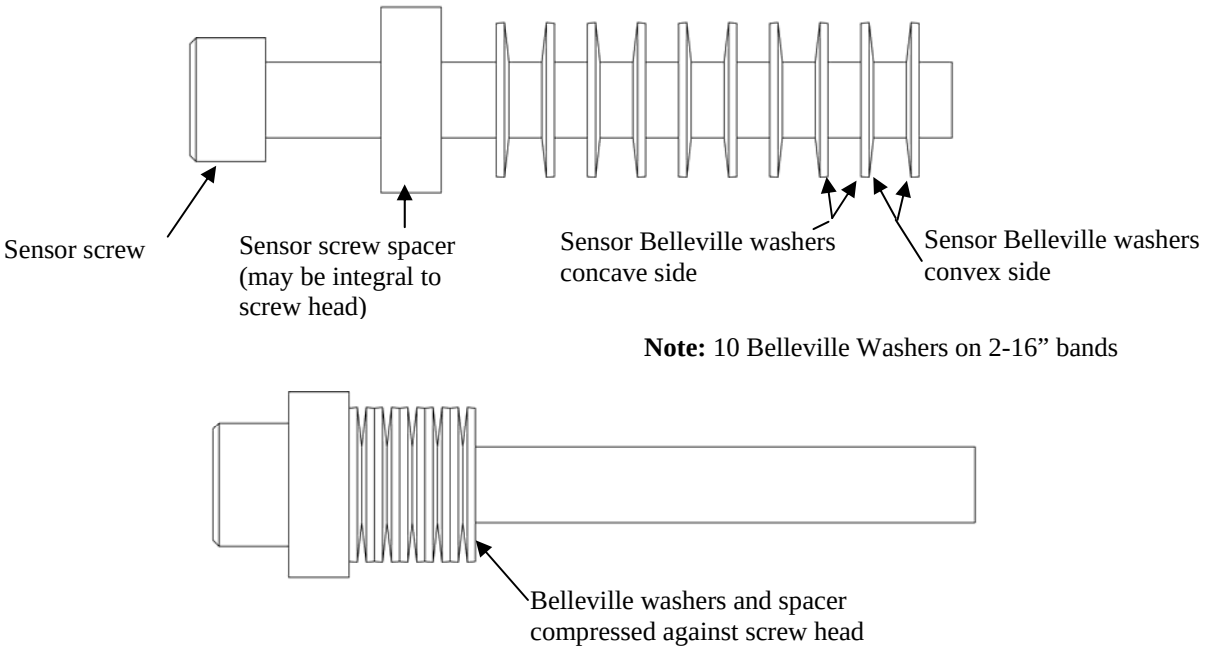

Figure 8 Sensor Band Screw Assembly

Further tightening of the sensor band screws is made while using the sensor band spacer tool (shown below) furnished with the sensor band. The spacer tool is used to set the compression on the Belleville washers referred to above. Refer to Table 4 for the appropriate spacer tool based on sensor band part number.

Figure 9 Sensor Band Spacer Tool

Copyright © 2006 CiDRA Corporation

Using the sensor band screw tightening sequence shown in Figure 9, insert the sensor band spacer tool over the Belleville washers on the middle sensor screw assembly and tighten it such that it is snug but the spacer tool can still be removed. The following figure illustrates use of the sensor band screw spacer tool.

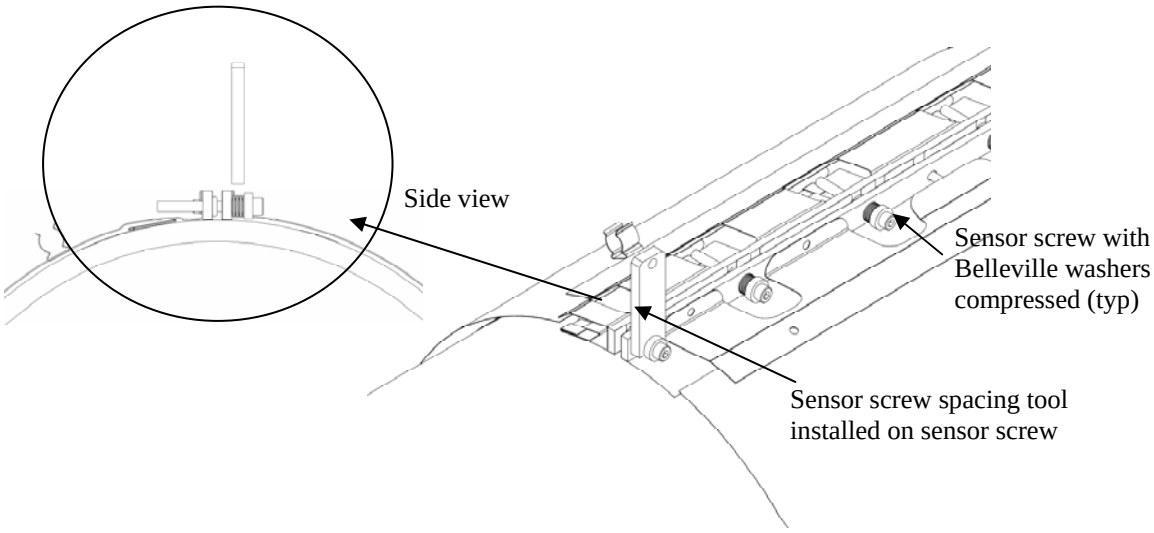

Figure 10 Sensor Band Spacing Tool Installed on Sensor Screw

Note: Ensure the spacer tool is perpendicular to the attachment rail to ensure proper tightness. Remove the tool, move to the next sensor screw, and repeat the tightening on each of the sensor screws.

Important: Tighten each screw once only. Do not retighten each screw using the gauge.

Final sensor band screw tightening is as follows:

A. For sensor bands sized for 6" and smaller pipe:

1. Tighten screws #1-7 an additional one-half turn in the numbered sequence given in Figure 7. Do not tighten screw #8 & 9 (screws on either end of the sensor band).

B. For sensor bands sized for 8" and larger pipe:

1. Starting at screw #1 in Figure 7, tighten each screw an additional one-half turn in the given numbered sequence.
2. Once all nine screws have been tightened, tighten each screw an additional one-half turn in the given numbered sequence.
3. Once all nine screws have been tightened a second time, tighten screws #1-7 an additional one-half turn in the given numbered sequence.

Attach the sensor cable in the retaining clip on the top of the sensor band. The connector on this cable will attach to the sensor cover

Copyright © 2006 CiDRA Corporation

connector as described later in the manual. If necessary, use a piece of tape to temporarily retain the connector on the band so it will be positioned directly below the sensor cable access panel. The final sensor band assembly is illustrated below.

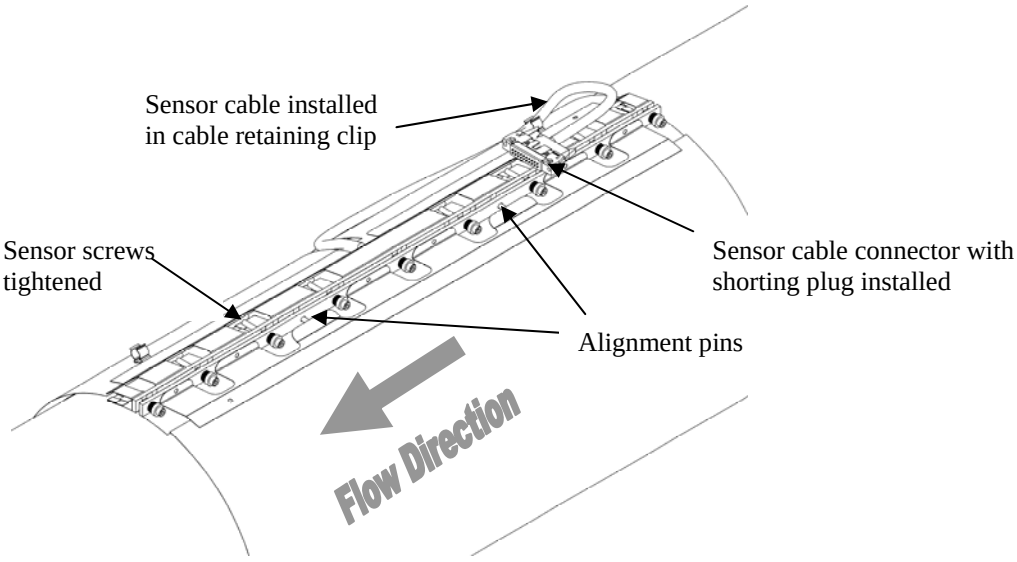

Figure 11 Installed Sensor Band

⚠	**CAUTION** **Over-tightening of fasteners may damage threads on the sensor. Under tightening may affect flow meter performance. Always use the sensor fastener spacer tool to ensure proper fit of the sensor assembly.**

7.5.1 Sensor Band Short Test

Shorting of the sensor band to the process pipe may cause signal interference or electrical faults in the system in some instances. The sensor band must be electrically isolated from the process pipe.

Use an ohm meter and verify the sensor band is isolated from the pipe. Measure the resistance between the sensor rails and the pipe to ensure there is no continuity between the sensor band and the process pipe. If the band is shorted identify where the short is located and eliminate the short. For example, if a sensor screw is shorting to a pipe weld bead, reposition the sensor band, or lightly file the weld bead to eliminate the interference.

Copyright © 2006 CiDRA Corporation

7.6 Sensor Cover Installation

The upper sensor cover assembly outside and inside are illustrated in the following figures. Cover sizes up to 16 inch are typically made of fiberglass. Cover sizes 18 inch and above are made from stainless steel. The layout of both styles is essentially the same. The differences in installation will be called out in the following sections.

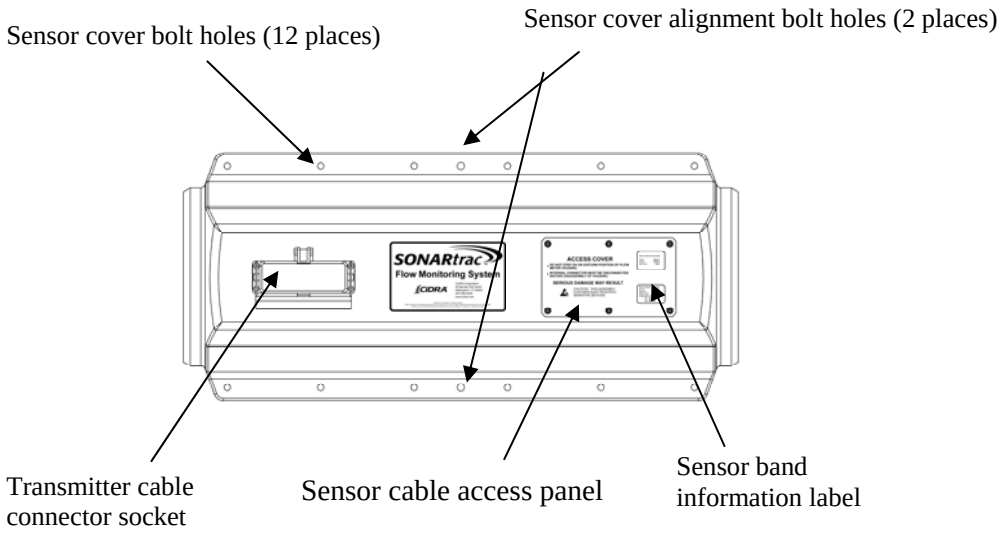

Figure 12 Upper Sensor Cover Assembly Outside View

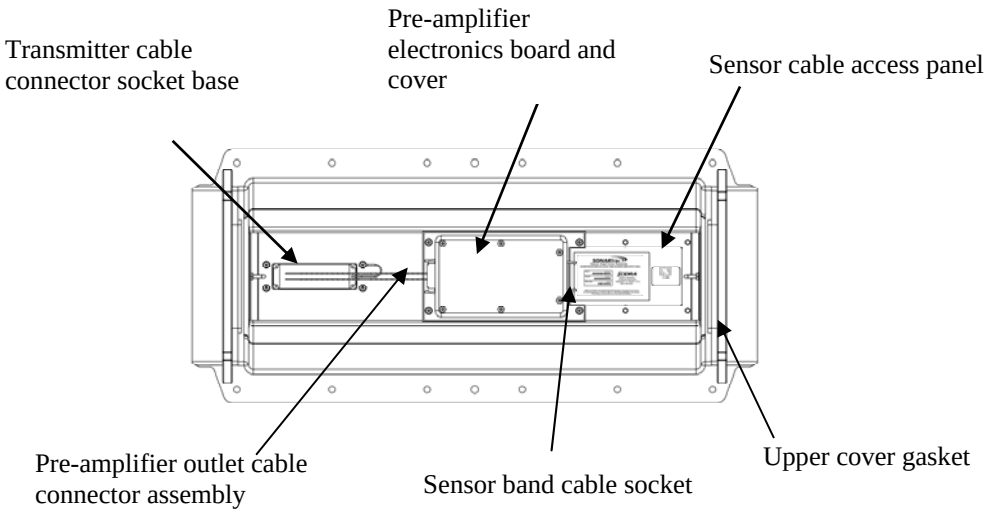

Figure 13 Upper Sensor Cover Assembly Inside View

Copyright © 2006 CiDRA Corporation

It is helpful to have a second person available to help when installing the cover assembly. When the sensor head is installed on a horizontal pipe, the sensor cover should be installed such that the transmitter cable connector socket is located within the 105° arcs shown in the following figure. Do not install the cover with the transmitter cable connector socket installed downward. (An electrical pre-amplifier board is mounted on the inside of the cover.) The ability to route the sensor band to sensor cover cable may dictate cover orientation. The cable gland on the sensor head to transmitter cable connector, when installed, should face away from the cover.

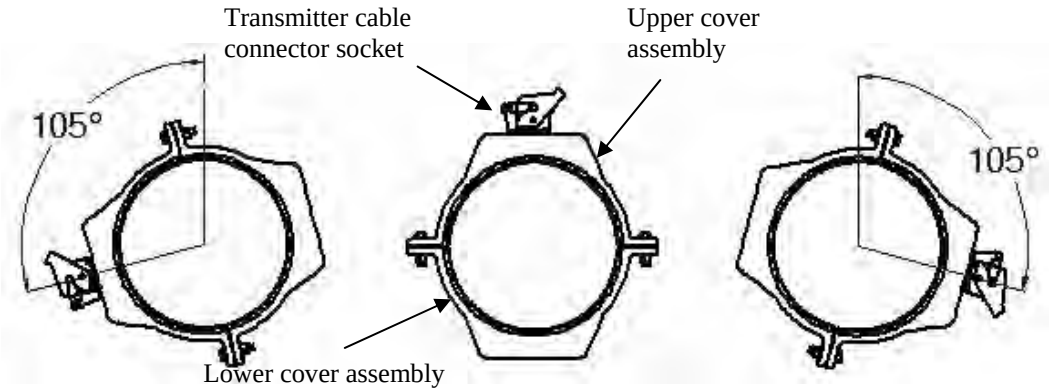

Figure 14 Orientation of Sensor Cover

If the sensor head is installed on a vertical pipe, the cable connector should be located so it is facing downward.

7.6.1 Fiberglass Cover Installation

Remove the sensor cable access panel from the sensor upper cover assembly.

Apply a coating of the P/N 52307-01 PTFE Pipe Sealant (acts as a lubricant during installation and sealant once cured) to the cover gaskets. **Note:** This sealant is not used with stainless steel covers.

Install the sensor upper cover assembly over the sensor assembly. Install the lower sensor cover. Hold the halves in place with spring clamps. **Note:** Ensure the sensor cover does not pinch the sensor cable. **Note:** Ensure the sensor cable connector is accessible through the sensor cable access panel. (Reposition cover or cable connector if necessary.)

Care must be taken during installation of the sensor band and sensor band cover to ensure the sensor band cable does not become pinched between the cover halves. The problem may show up as a sensor failure during sensor tests and operation of the meter.

This potential problem is most likely to occur in small size meters (<6-inch) due to the length and stiffness of the sensor band cable.

Copyright © 2006 CiDRA Corporation

The following steps will help minimize this problem:

1. Visually look between the cover halves to ensure the cable is not being pinched.
2. Once the cover halves are bolted in place and during installation of the sensor band cable connector into the pre-amplifier through the access cover, verify the sensor band cable is free and not pinched between the cover halves.
3. If the cable is not free and appears to be pinched, remove the sensor band cable from the pre-amplifier, unbolt the cover, free the cable from between the cover halves and then re-install. Note this on the installation report for future reference.

Refer to the following figure. Align the center alignment holes on the sensor cover. Install a 3” long 3/8” diameter alignment bolt, with washer under the bolt head, in center holes on both sides of the cover. Install a washer and nut on the alignment bolts. Install a 5/16”-18 x 1.5” tin plated 316 SST bolt with washer into each of the 12 cover bolt holes in the upper cover.

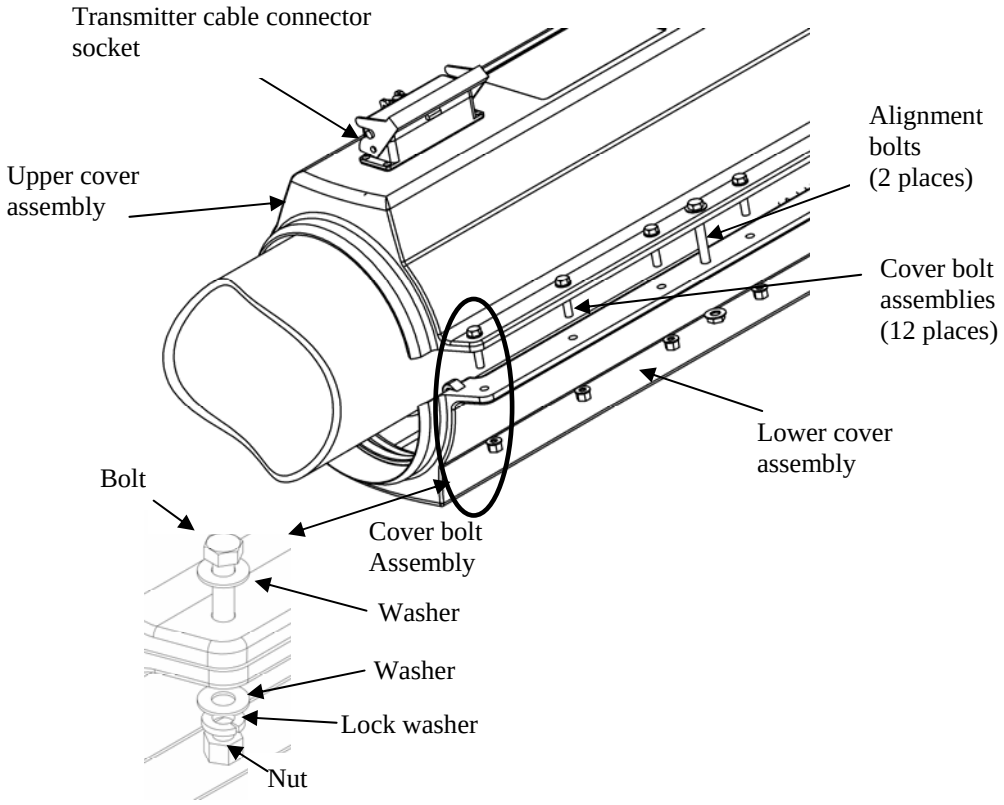

Figure 15 Sensor Cover Bolt Installation

Tighten the alignment bolts 2 – 3 turns alternating between both sides of the cover until the cover bolts protrude through the lower cover assembly. **Note:** Use of the alignment bolts may not be necessary if the cover bolts and nuts can be made up.

Place a washer, lock washer and nut on the end of the sensor cover bolt once it is through both halves of the cover and begin drawing the cover halves together using the cover bolts. It is no longer necessary to use the alignment bolts to draw the cover halves together.

Continue tightening the sensor cover bolts 1 - 2 turns in the tightening sequence shown in Figure16. The gasket on the cover will compress and the cover assembly halves will pull together. Tighten the cover bolts until the two halves of the cover are drawn together so that there are no gaps along the axis of the cover. **Note:** There may be some small gaps between the cover halves in between the bolts; this is normal.

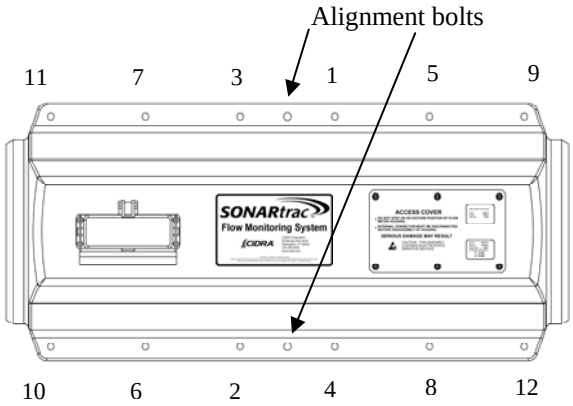

Figure 16 Sensor Cover Bolt Tightening Sequence

Note: The gaskets on the cover assembly will compress and conform to the pipe surface during installation. Upon removal the gasket will relax a little and will provide proper sealing if re-installed at the same location from where it was removed.

⚠	**CAUTION** **The sensor cover gasket on fiberglass covers should be replaced, if the assembly is moved to another pipe, to minimize the potential for water leakage into the cover. Refer to rework instructions (RI-0001) for information.**

Following installation of the cover fasteners remove the alignment bolts.

Copyright © 2006 CiDRA Corporation

7.6.2 Stainless Steel Cover Installation

The stainless steel cover is illustrated in the following figure.

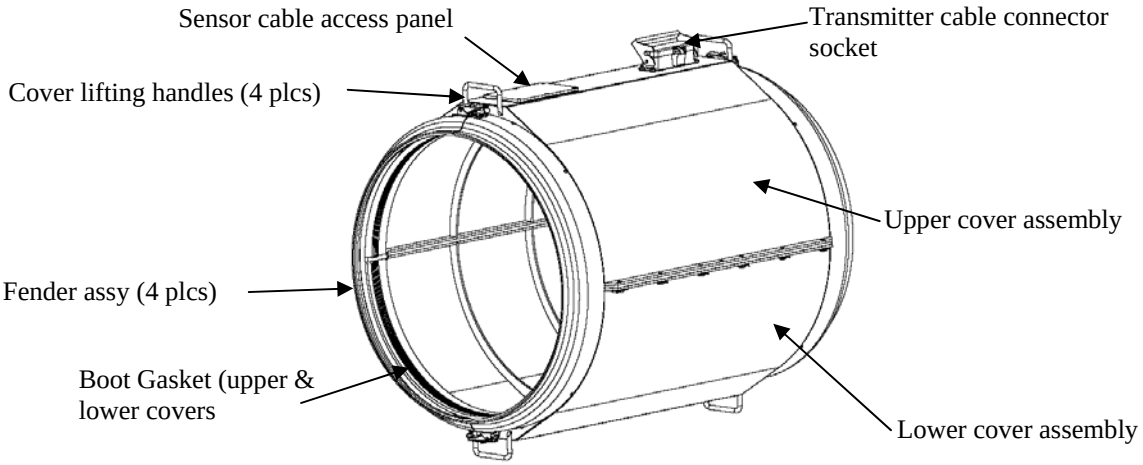

Figure 17 Stainless Steel Cover Assembly

⚠	**WARNING** **The handles on the stainless steel cover are not designed or rated for hoisting the cover. Use a proper lifting sling to properly secure cover to lifting rope when hoisting cover.**

Remove the sensor cable access panel on the cover and place the upper cover assembly on the pipe (do not use the Teflon sealant on stainless steel cover boot gaskets). **Note:** Ensure the sensor cable connector is accessible through the sensor cable access panel. (Reposition cover or cable connector if necessary.)

Place the lower cover on the pipe and retain the cover halves with spring clamps or vice grips. Install and tighten the cover bolts 1 – 2 turns. (The stainless cover will either have a fastener assembly consisting of a bolt, 2 washers, a lock washer and locknut, or, a bolt with one washer and the nut retained in the lower cover flange.) Continue to tighten the cover bolts until the flanges bottom on the spacers integral to the flange and flange seal.

Apply a coating of the Joining Compound (comes in the Installation Kit) to the flange seal and boot gasket at the edge of the lower cover (4 places). Press the upper boot gasket and Joining Compound coated lower seal edges together.

Copyright © 2006 CiDRA Corporation

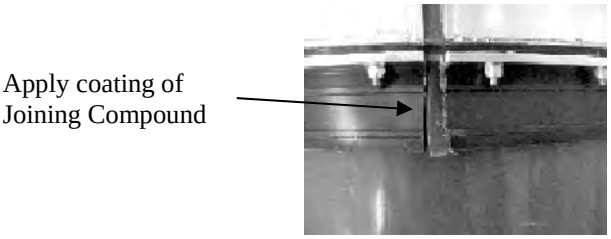

Figure 18 Applying Joining Compound to Gasket Edge

7.6.2.1 Boot Gasket Band Installation

The boot gasket band will be shipped cut to length for the cover size with the retaining buckle pre-installed. The boot gasket band should be completely installed on one end of the cover and then repeated on the other end.

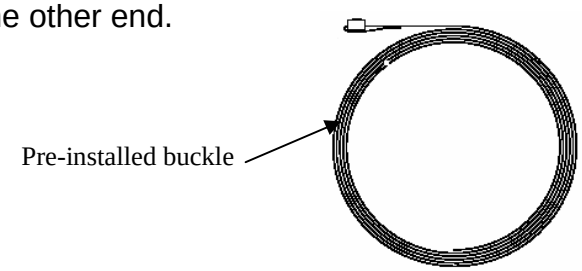

Figure 19 Boot Gasket Band Kit

Position the buckle on the band over the gasket protector plate located on the top of the upper cover outboard of the handles.
Note: When installation is complete the buckle must be positioned on the protector plate to protect the gasket from being damaged.

Wrap the band around the boot gasket and pass the end through the buckle on the band. Wrap the band around the boot gasket a second time and pass it through the buckle. Do not pull the band taut.
Note: Ensure the band is aligned within the grooves on the boot gasket and the second wrap of the band is directly over the first wrap.

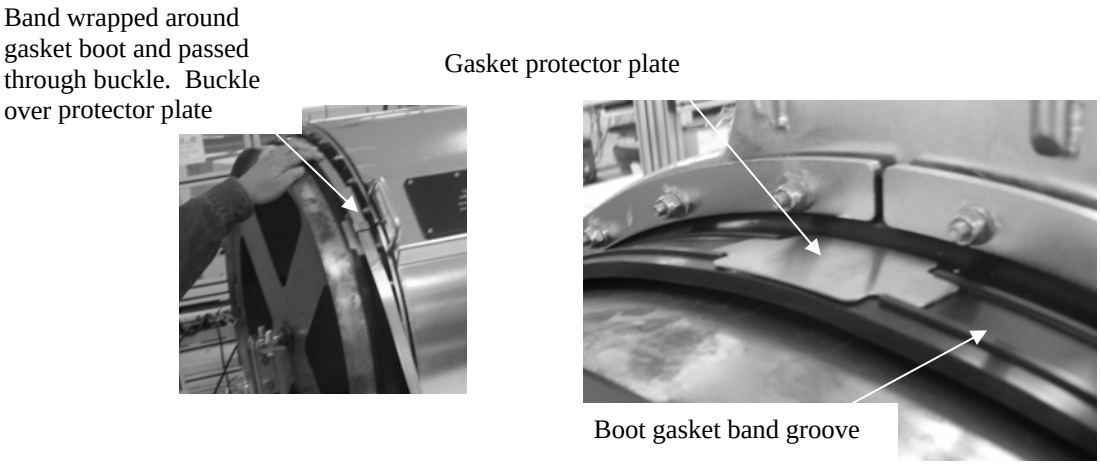

Figure 20 Boot Gasket Band Installation

Copyright © 2006 CiDRA Corporation

Remove the GelTek paper backing from the splice protector plate, lift the band using needle nose pliers or a screwdriver, and slide the plate into position over the flange gasket. Be careful the GelTek stays in position on the plate. Pull the band taut. Tighten the socket head cap screw on the band buckle just enough to keep the band in place but loose enough so it will still slide through the buckle. Repeat on the opposite end of the cover.

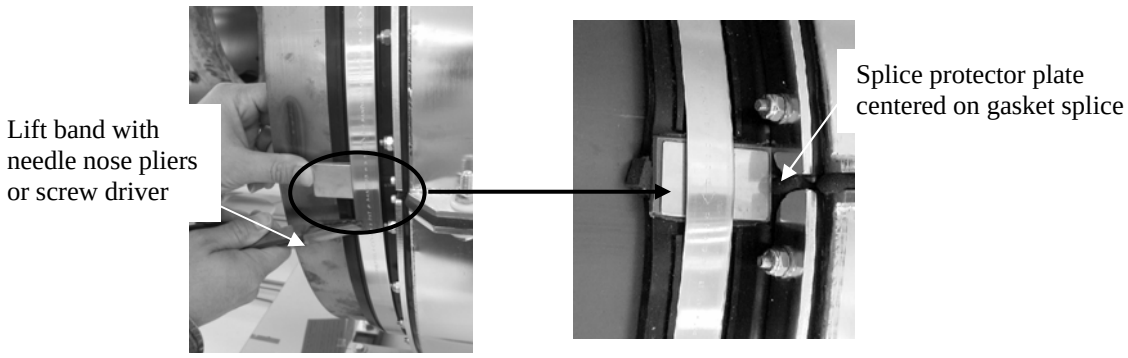

Figure 21 Splice Protector Plate Installation

Install the BAND-IT® Model C001 tensioning tool by inserting the band through the cutter bar and slide lock.

Note: This tool is asymmetric. The tool will pull in opposite directions when installed on opposite ends of the cover. The cutter handle (positioned either up or down) on the Model C001 is located outboard with respect to the cover end when the tool is properly installed. The following figure illustrates proper installation of the tool.

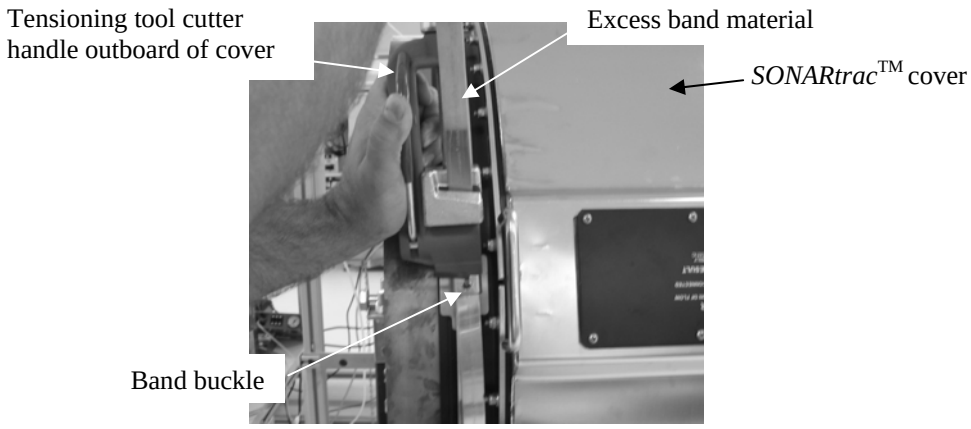

Figure 22 BAND-IT® Model C001 Tool Use

Verify the band is still aligned within the grooves on the boot gasket and over the first wrap of the band, and the band buckle is positioned over the gasket protector plate.

Copyright © 2006 CiDRA Corporation

Tension the band until the resistance on the tool handle is constant (i.e. the band does not slide easily through the buckle). The boot gasket should be tight against the process pipe under the gasket protector plate. Verify the band buckle and splice protector plates are still in place.

Tighten the setscrew to lock the band in place. The band will be dimpled by the setscrew.

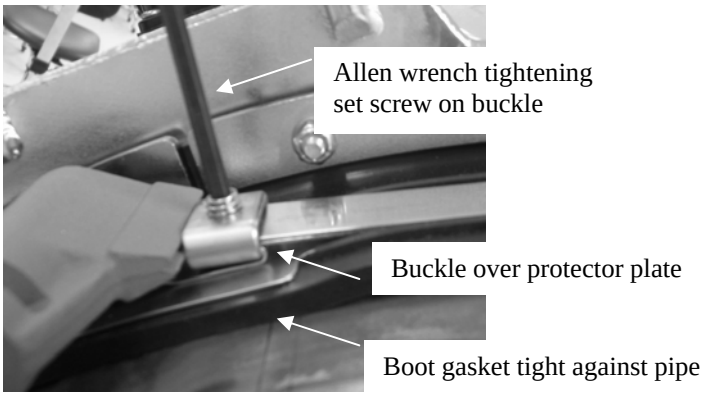

Figure 23 Final Alignment and Securing of Gasket Band

Once the set-screw has been fully tightened, loosen the tensioning tool and bend the tool and band up and over the buckle. It is not necessary to cut excess band material (allows for re-tightening of band if necessary).

Repeat the band installation procedure for the opposite end of the cover.

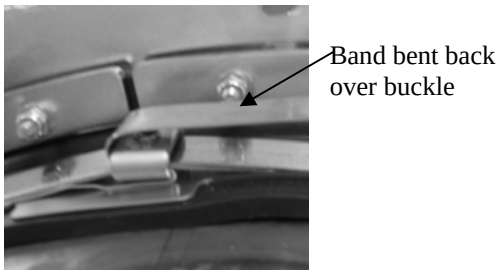

Figure 24 Band Termination

7.6.2.2 Boot Gasket Fender Assembly Installation

The stainless steel cover uses four boot gasket fender assemblies (two per end) to protect the boot gaskets. The fender should be installed such that the retaining clasp is next to the cover handles. The completed cover assembly is shown in Figure 17.

Copyright © 2006 CiDRA Corporation

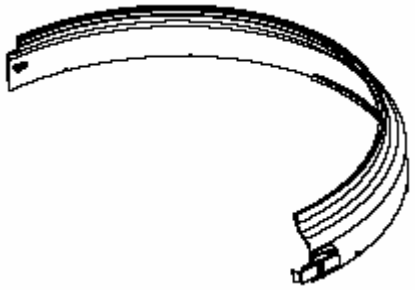

Figure 25 Boot Gasket Fender Assembly

7.6.3 Sensor Assembly Cable Connection

Remove the tape (if it was used) that was temporarily installed to retain the sensor connector under the cover access panel. Remove the factory installed shorting plug from the sensor cable connector. Place the shorting plug in the holder in the transmitter housing. (It will be used if sensor removal from the pipe is necessary.) Install the sensor assembly cable connector into the mating receptacle located inside the access cover plate on the sensor upper cover as shown below. The connector is installed such that the connector key faces away from the pipe. Push the connector into the mating receptacle. The locks on the receptacle will engage to keep the plug from pulling out. Ensure the connector is fully engaged. **Note:** Use care to ensure the sensor cable connector goes on squarely to minimize risk of damaging the contacts.

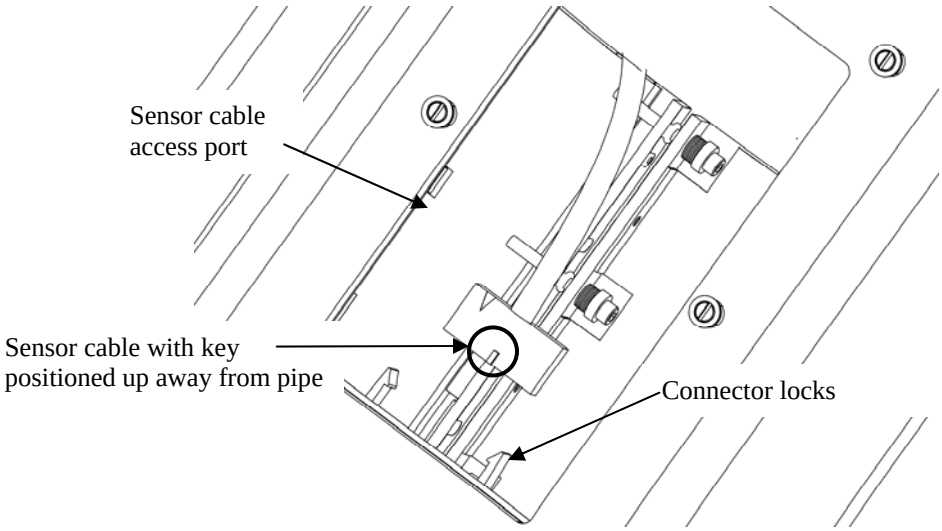

Figure 26 Sensor Assembly Cable Installation

Re-install the sensor cable access panel on the sensor top cover assembly. Tighten the six panel screws to a recommended torque of 11-lb_f-in (1.2-Nm).

7.6.4 Rain Boot Installation

A sensor cover rain boot will be installed on the upward facing end of sensor covers when the sensor head is installed in vertical applications. The rain boot serves as a secondary seal against water leakage under the cover (the sensor cover seal is the primary seal). **Note:** The stainless steel covers do not need a rain boot.

Wrap the elastomeric rain boot around the sensor cover and pipe. Temporarily secure the rain boot with the adhesive patches provided on the rain boot. Install one of the two band clamps around the rain boot section that covers the sensor cover. Install the second band clamp on the portion of the rain boot that contacts the process pipe. Secure both bands. Inspect to make sure there is a good seal between the rain boot and the pipe.

7.6.5 Sensor Calibration Label

The sensor band is shipped with two labels enclosed with it. The label lists the sensor part number, serial number, date of manufacture and three calibration factors. This information will be entered into the transmitter during setup (section 11.1.1). Affix one of the labels to the outside of the access panel of the sensor cover as shown below.

The second label should be installed on the inside of the transmitter cover.

Note: Sensor band information is also found on a label on the sensor cable next to the sensor cable connector.

Copyright © 2006 CiDRA Corporation

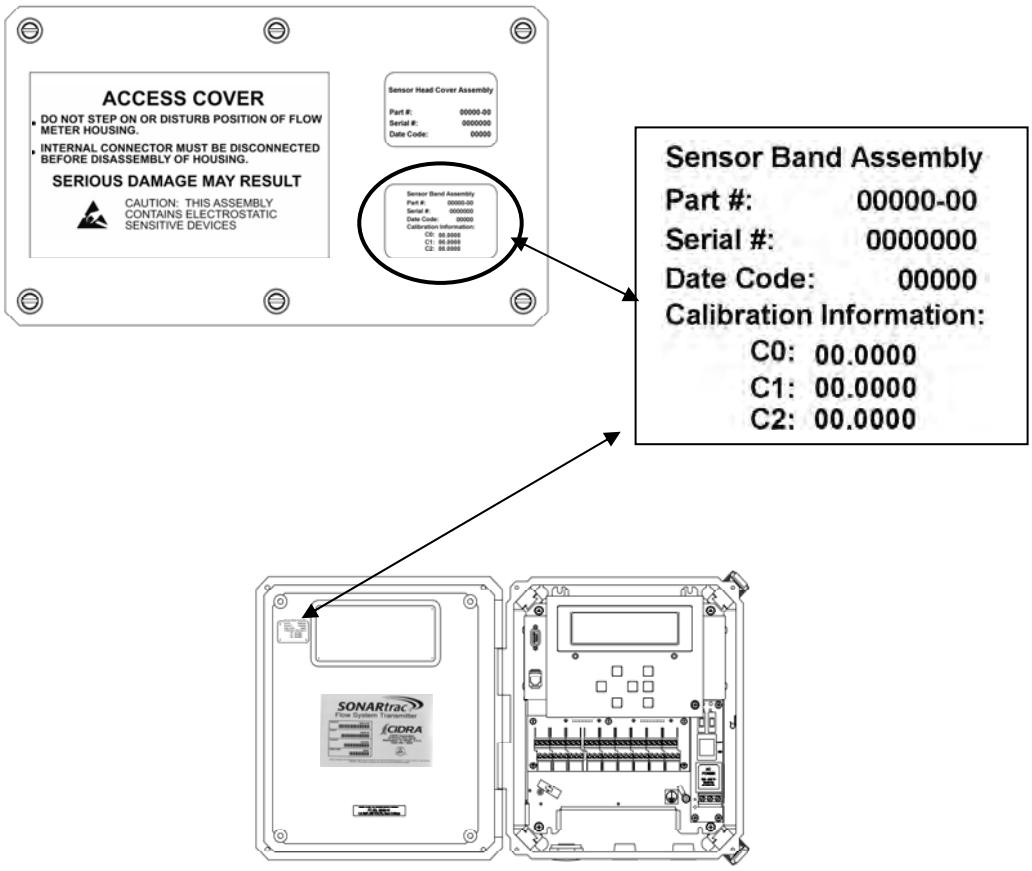

Figure 27 Sensor Calibration Label

7.7 Sensor to Transmitter Cable Connections

The sensor to transmitter cable is used to transmit sensor signals and information between the transmitter and the sensor, and provides electrical power to the sensor pre-amplifier board mounted in the sensor cover.

The sensor to transmitter cable consists of 12 twisted pairs of 20 AWG conductors with an overall cable shield encased in a PVC jacket. The standard cable has an operating range of -4 ºF to 221 ºF (–20 ºC to 105 ºC). The cable is UL Listed (UL Standard 13, Type PLTC) and CSA Certified (CSA C22.2 No. 214, PCC FT4). The outer diameter of the cable is 0.61 inch (15.5 mm) nominal.

Optional low temperature and armored cables are also available. Please contact your local distributor or CiDRA Corporation for more information.

The sensor to transmitter cable is furnished with a NEMA 4X connector attached to the sensor head end. The transmitter end can be cut to length and terminated at installation.

The sensor to transmitter cable can be either run in cable trays or through conduit in accordance with local practice.

7.7.1 Sensor End Cable Attachment

Once the cable is run, attach the connector on the sensor cable end to the mating connector on the sensor cover. Align the keyway on the sensor connector and latch in place.

Copyright © 2006 CiDRA Corporation

7.8 Installations on Tubing

The sensor head will fit on process tubing as well as pipe. This is accomplished through the use of a sensor band specifically sized for tubing and the use of elastomeric strips wrapped around the tube (in order to increase the tube diameter to that of pipe) in the areas of the pipe seal gaskets on the fiberglass cover.

A sensor band specifically sized for use on tube must be ordered (the overall length of the tube-sized sensor band will be shorter than a pipe sized band due to the difference in outside diameter of a specific size tube vs. pipe).

Installation is as follows:

1. Clean the tube where the sensor head will be installed. The overall clean length should be at least 30 inches (76 cm).
2. Measure a distance of 24 inches (70 cm) on the cleaned tube and mark this distance on the tube.
3. Install the elastomeric strips such that the in-board edges of them align with the marks on the tube, and the paper covered adhesive strips will contact the tube.
   a. Remove the paper strips covering the adhesive.
   b. Wrap the elastomeric strip 3/4^{ths} of the way around the pipe. Pull it taut so it lies smoothly and evenly on the pipe.
   c. Apply a bead of the Teflon sealant (provided for the cover gaskets) along the seam at the starting edge of the elastomeric strip.
   d. Continue to wrap the elastomeric strip overlapping the previous layer.
   e. Once the wrap is complete, apply a bead of the Teflon sealant along the seam.
   f. Install the second strip per the above steps
4. Continue with installation of sensor head as previously described in the manual.

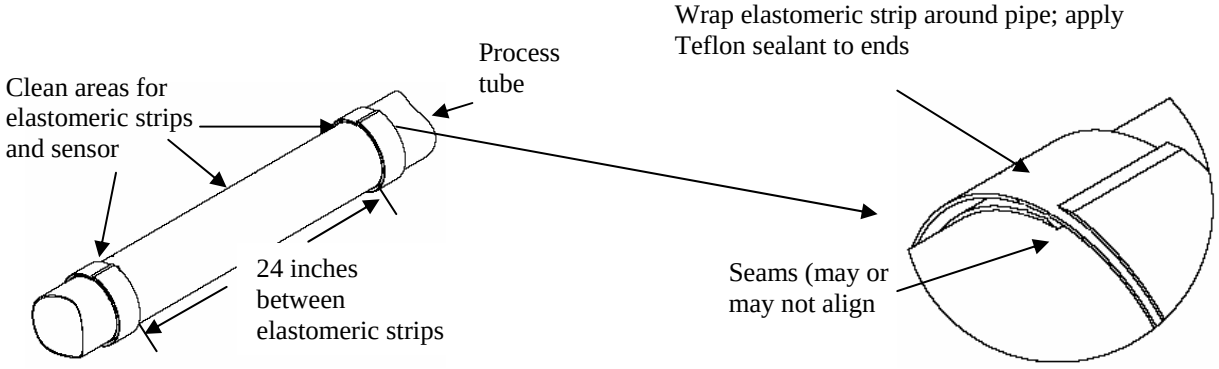

Figure 28 Elastomeric Strip Installation on Tubes

Copyright © 2006 CiDRA Corporation

8 TRANSMITTER INSTALLATION

8.1 Transmitter Power Requirements

The AC version of the transmitter can accommodate an input voltage of 100 – 240 volts AC, 50/60 Hz, and requires 25 watts of power.

The AC powered transmitter input power is fuse protected by two 1 amp, 250 volt, 5mm x 20mm fuses.

The DC version of the transmitter can accommodate an input voltage of 18 – 36 volts DC and requires 25 watts of power.

The DC powered transmitter input power is fuse protected by two 3.15 amp, 250 volt, 5mm x 20mm fuses.

Only replace fuses with the fuse type indicated on the label inside of the transmitter cover.

	WARNING **Electrical shock hazard. Always disconnect power source prior to removing fuses. Failure to remove power source may result in injury or death.**
	WARNING ***When explosive gases may be present, obtain hot work permit or disconnect power source prior to opening cover. Failure to remove power source may result in injury or death.***

8.2 Transmitter Environmental Conditions

The transmitter operating temperature range is –4 ºF to 140 ºF (-20 ºC to 60 ºC).

The NEMA 4X transmitter housing is suitable for operation in 0 – 100% relative humidity environments.

8.3 Transmitter Mounting Instructions

The transmitter is furnished with a Bulkhead (wall or panel surface mount) Installation Kit. An optional Pipe Installation Kit is also available.

The maximum sensor head to transmitter cable length is 300 feet.

Select an installation location that allows for easy and safe access to the transmitter. Ensure the local ambient temperature range is within the operating temperature limits of the transmitter. If possible, avoid locations with extreme vibration and locations that are subject to extreme water conditions (i.e. direct hose-down).

Copyright © 2006 CiDRA Corporation

8.3.1 Bulkhead Mounting

The transmitter is attached to the bulkhead or panel with user supplied 1/4-inch fasteners through the four panel mounting feet on the transmitter. The mounting dimensions are illustrated in the following figure.

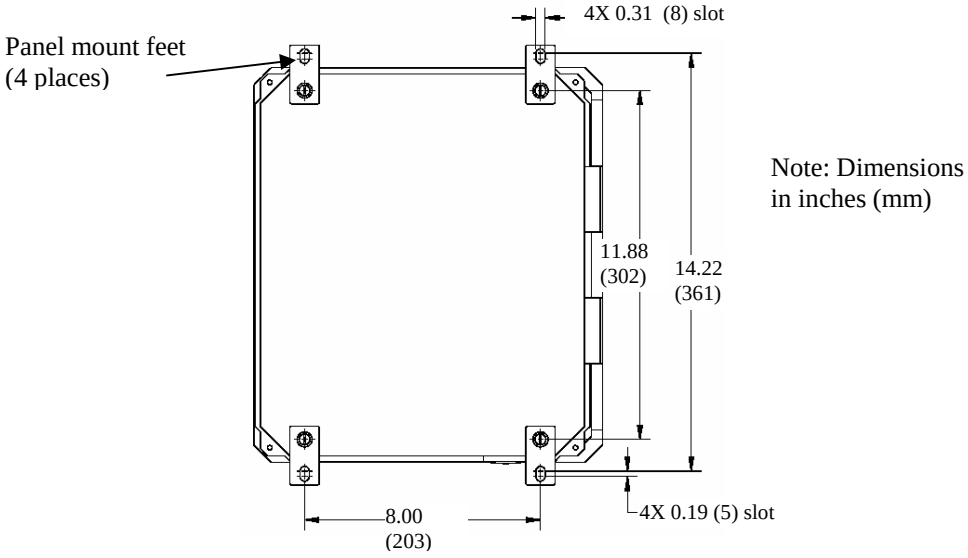

Figure 29 Bulkhead Mount Hole Pattern

8.3.2 Pipe Mounting

The optional Pipe Mount Kit is designed to allow for mounting the transmitter assembly to pipes up to 10-inch (250 mm) diameter and equivalent sized I-beams. The kit consists of two mounting rails, two band clamps, and fasteners. (Additional lengths of clamps can be added for larger diameter pipes and I-beams. Please contact your local distributor or CiDRA Corporation for more information.)

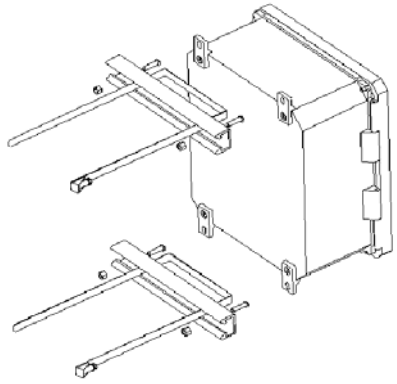

Figure 30 Pole Mount Kit

Attach the mounting rails to the panel mounting feet using the 1/4-20 x 3/4” screws and locknuts supplied with the rails. Slide the band clamps through the slots in the mounting rails as shown. Wrap the clamp around the pipe and feed the band through the clamp and tighten. Excess band material can be removed if desired.

Copyright © 2006 CiDRA Corporation

8.4 Transmitter Cable Connections

The following figure illustrates the basic power and signal connections for the *SONARtrac*™ VF & GVF Monitor. These are discussed in further detail in the following sections.

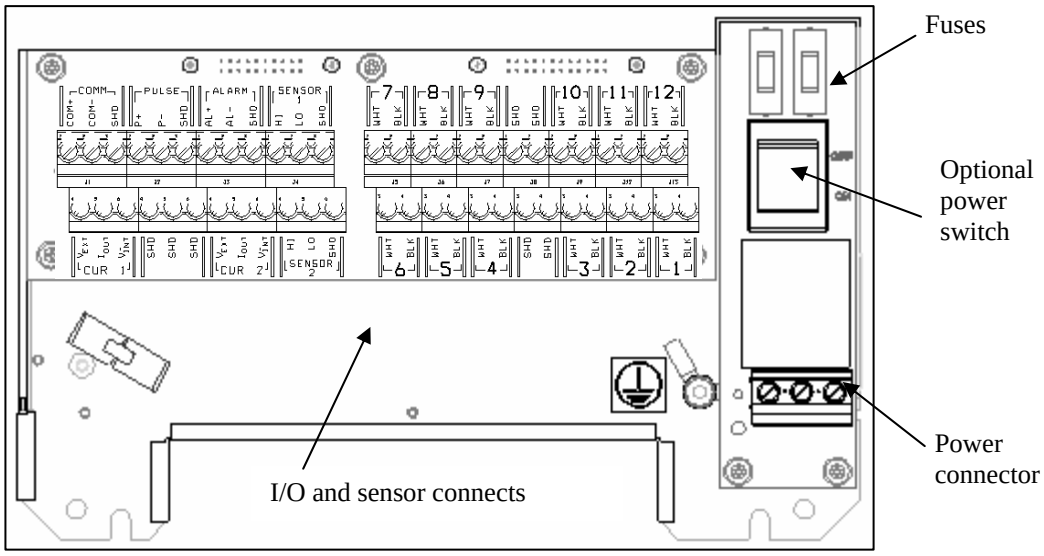

Figure 31 Power and Signal Interconnects

8.4.1 Transmitter Housing Cable Entry

Power, sensor signal, and input /output signal cables enter the transmitter housing through cable glands. The cable glands also provide strain relief for the cables. Always ensure they are fully tightened. The following figure illustrates where each of the cable glands are installed.

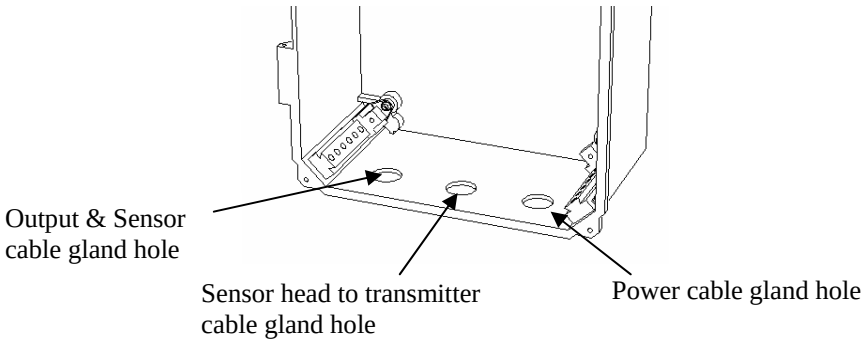

Figure 32 Transmitter Housing Cable Gland Holes

Note: *On those transmitters installed in Class I Division 2 areas, cable glands rated for NEMA 4X (minimum rating) must be used. Any unused cable gland holes must be sealed with NEMA 4X rated hole plugs. Also, the four cover sealing screws on the transmitter cover must be securely tightened in order to ensure a proper seal.*

Copyright © 2006 CiDRA Corporation

⚠	**WARNING** **Transmitter cover screws must be securely tightened and NEMA 4X rated cable glands and hole plugs must be used in Class I Division 2 applications. Failure to do so may result in violation of Class I Division 2 certification.**

8.4.2 Transmitter Output, Sensor and Sensor Head Connections

The following figure shows the layout of the transmitter terminal strip board. This board is divided into three sections.

The Section#1 terminal blocks are for transmitter outputs.

The Section #2 terminal blocks are for external sensor inputs (pressure and temperature).

The Section #3 terminal blocks are for the cable interface to the sensor head. This consists of 12 twisted pairs of conductors plus a cable drain wire (shield). For Class I, Division 2 rated versions these are to be treated as non-incendive field wiring.

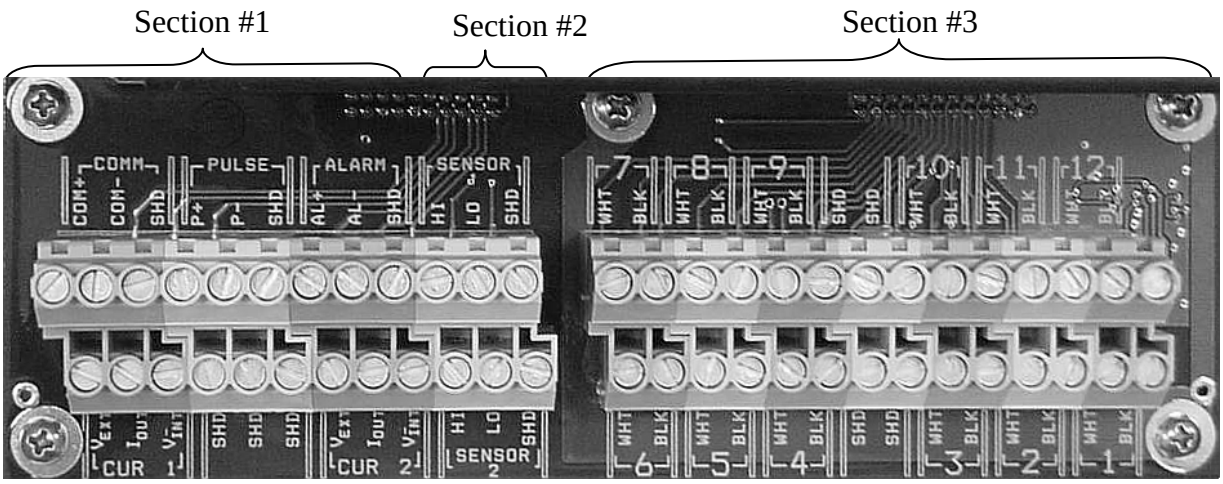

Figure 33 Terminal Board Layout

8.4.2.1 Transmitter Output Connections (Section #1)

The following figure provides a close-up of the transmitter output terminals (Section #1 of the terminal board) with their functions listed in the following table. These outputs can be connected as appropriate to permit communications between the transmitter and other equipment.

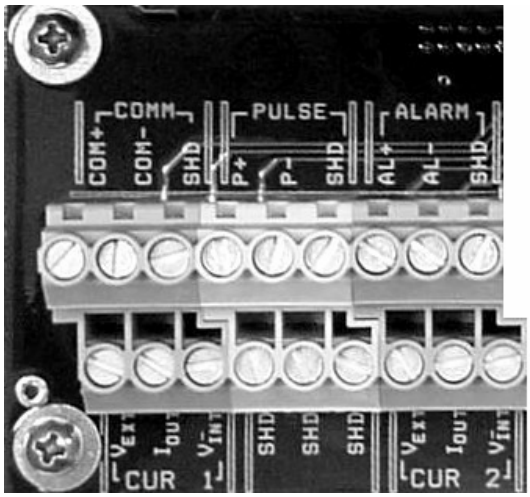

Figure 34 Transmitter Output Terminals

Terminal Label	Type	Comment
CUR 1	4-20mA #1 Output	Internal (self) or external (loop) powered, HART communication capable
CUR 2	4-20mA #2 Output	Internal (self) or external (loop) powered
PULSE	Pulse output	Solid-state relay closure
ALARM	Alarm output – High / Low Output	Solid-state relay closure
COMM	RS-485 or 232 Output	User configured
SHD	---	Shield Connections

Table 5 List of Transmitter Signal Outputs

User supplied data output cable (size range AWG 30 to AWG 10) is installed through a cable gland in the furthest left hole on the transmitter housing and attached to the appropriate terminal block connection points. The cable gland is sized for a 3/4 inch NPT fitting (1-1/16 inch hole).

⚠	***WARNING*** ***For Class I, Division 2 applications, Power Entry and Inputs/Outputs must be installed in accordance with Article 501.10(B)(1) of the National Electrical Code ANSI/NFPA 70:2005***

Copyright © 2006 CiDRA Corporation

8.4.2.2 Transmitter Input Connections (Section #2)

In some cases, a pressure or temperature transducer signal is used as an input to the transmitter. These terminals are shown in the following figure.

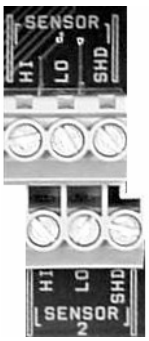

Figure 35 Transmitter Sensor Terminals

When used, the setup of the individual sensors is performed as part of the overall transmitter setup detailed in this manual.

8.4.2.3 Sensor Head to Transmitter Cable Connections (Section #3)

The sensor head to transmitter cable is used to transmit sensor data and information between the transmitter and the sensor head, and provides power to the electronics mounted in the sensor cover.

Note: The armored cable is equipped with a shield wire on the CiDRA supplied cable gland nut. This shield wire is connected to any of the SHD terminals in Section #3 of the terminal board.

The sensor head to transmitter cable is furnished with a NEMA 4X connector attached to the sensor head end. The transmitter end is cut to length and terminated at installation.

The sensor head to transmitter cable can be either run in cable trays or through conduit in accordance with local practice.

Sensor Head End Cable Attachment - Once the cable is run, attach the connector on the sensor cable end to the mating connector on the sensor cover. Align the keyway on the sensor connector and latch in place.

Transmitter End Cable Attachment - **Note:** Each wire pair may be numbered on the white wire only. Care should be taken to ensure the black non-numbered conductor stays matched with its numbered white conductor.

⚠	**CAUTION** **Ensure each numbered white conductor and its corresponding black conductor remain as a set to ensure proper operation of the meter.**

Copyright © 2006 CiDRA Corporation

⚠	***WARNING*** ***For Class I, Division 2 applications, Sensor Head Cable must be installed in accordance with Article 501.10(B)(3) of the National Electrical Code ANSI/NFPA 70:2005.***

The transmitter is shipped standard with a cable gland. Replace as local wiring requirements dictate.

8.4.2.3.1 Non-armored cable installation

Remove 10 - 12 inches (25 – 30 cm) of outer jacket from the transmitter end of the cable. Remove the over-foil being careful not to damage the drain wire, to expose the 12 numbered pairs of conductors. Strip 3/8 inch (8mm) of insulator from each conductor. Twist each set of conductors together. It may be helpful to install wire number markers on each of the 12 sets of conductors to readily identify them.

Install the gland nut and gland on the cable and install in the center hole in the bottom of the transmitter box. Tighten the gland nut on to the cable sheathing.

The following figure shows the portion of the terminal board to which the sensor head is connected. Each terminal block set (of 2 terminals) is numbered to match the numbered wires found in the sensor head cable. In addition, the colors of each wire in each of the 12 sets are labeled on the terminal board, BLK=black and WHT=white. Insert a 3/8 inch (8mm) stripped portion of each wire into the corresponding terminal block location and tighten the locking screw taking care to not tighten on the wire insulation. The recommended torque for the terminal screws is 4.4 to 5.3 lb_f-inch (.5 to .6 Nm). The overall cable shield wire can be attached to any one of the four SHD terminals on this block.

Once all wires are installed, bundle them together using a tie wrap. This will keep them separated from others wires in the transmitter box.

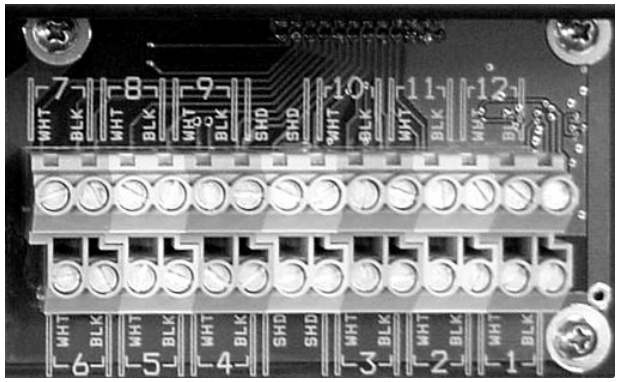

Figure 36 Sensor Head to Transmitter Cable Connection Terminals

Wire Pair #	Transmitter Terminal #	Function	SENSOR CONNECTOR PIN NUMBER	
1 Wht/Blk	1	Sensor #1 Input	1 - Wht	13 - Blk
2 Wht/Blk	2	Sensor #2 Input	2 - Wht	14 - Blk
3 Wht/Blk	3	Sensor #3 Input	3 - Wht	15 - Blk
4 Wht/Blk	4	Sensor #4 Input	4 - Wht	16 - Blk
5 Wht/Blk	5	Sensor #5 Input	5 - Wht	17 - Blk
6 Wht/Blk	6	Sensor #6 Input	6 - Wht	18 - Blk
7 Wht/Blk	7	Sensor #7 Input	7 - Wht	19 - Blk
8 Wht/Blk	8	Sensor #8 Input	8 - Wht	20 - Blk
9 Wht/Blk	9	Spare – unused	---	---
10 Wht/Blk	10	Wht – RS 485 Hi / Blk – RS485 Low	12 - Wht	24 - Blk
11 Wht/Blk	11	Wht – '-12 V' / Blk – Gnd	9 - Wht	21 - Blk
12 Wht/Blk	12	Wht – '+12 V' / Blk – Gnd	10 - Wht	22 - Blk

Table 6 Sensor to Transmitter Cable Terminal Connections

8.4.2.3.2 Armored cable installation

For those installations that will use armored sensor to transmitter cable, install the P/N 20448-01 transmitter housing stiffener plate (shipped with the armored cable) in the transmitter housing. Ensure the plate is installed with the bent edge up and located in the front portion of the transmitter housing. The stiffener plate is held in place by the cable gland fittings.

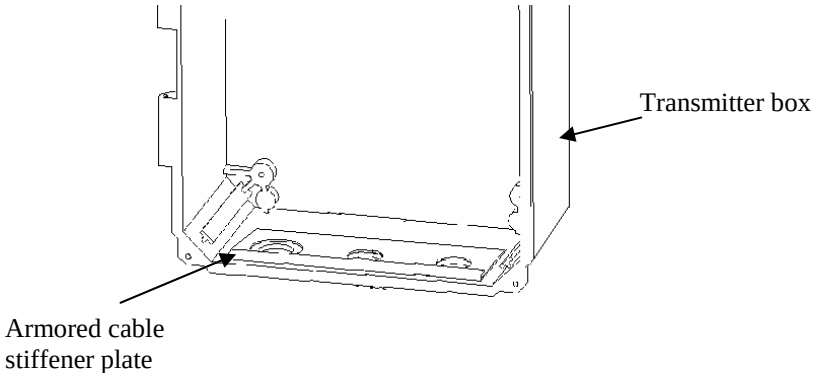

Figure 37 Armored Cable Stiffener Plate Installation

Copyright © 2006 CiDRA Corporation

Armored cable is shipped with the appropriate connector pre-installed on the cable and with the cable prepared for installation in the transmitter. Armored cable installation is similar to the non-armored installation except for the following.

- Cut the cable to desired length (if necessary) using a hacksaw to cut through the armor and remove about 14” (36 cm) of outer jacket from the transmitter end of the cable.
- Cut the armor 1-3/8” (35mm) from the outer jacket using a Roto-Split® (or equivalent) armor cutter. Twist the armor off of the cable.

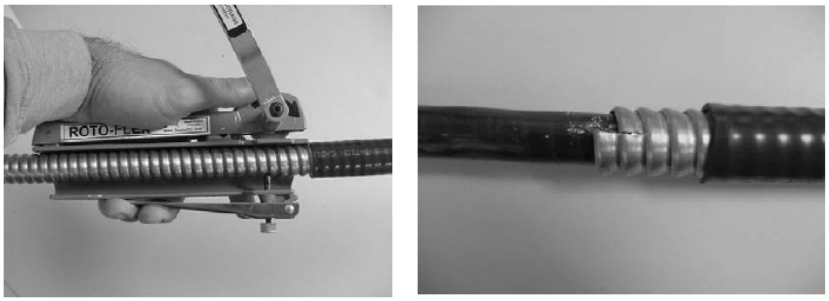

Figure 38 Removal of Cable Armor

- Install the armored cable connector by first removing the white end stop from the fitting and sliding the connector over the cable. Referring to the following figure, hand-tighten the entry component to the connector body and then final tighten 1-1/2 rotations using 1-5/8” wrenches. Hand-tighten and then final tighten the compression nut to the connector body 1 rotation using 1-5/8” wrenches. Cut and remove the conductor outer sheath about 3/4" (19mm) from the end of the entry component. Remove foil outer wrap and foil from each pair of conductors. As each pair is unwrapped, twist each pair of conductors to keep them together as pairs.

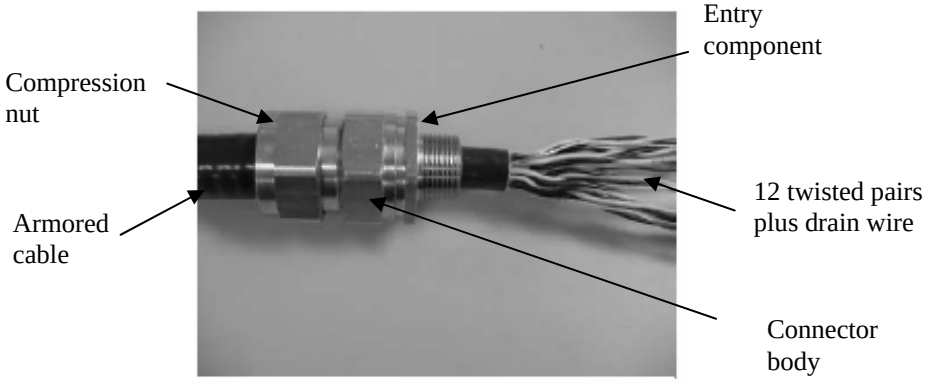

Figure 39 Armored Cable Connector Installed

Copyright © 2006 CiDRA Corporation

- Install the seal washer on the connector assembly entry component. Insert the cable and entry component into the middle hole in the transmitter box (stiffener plate previously installed.) Secure the connector assembly with the retaining nut. Attach the ground wire from the connector nut to any available SHD terminal on the Section #3 terminal block. Strip and install the individual connectors and shield wire per non-armored cable installation instructions.

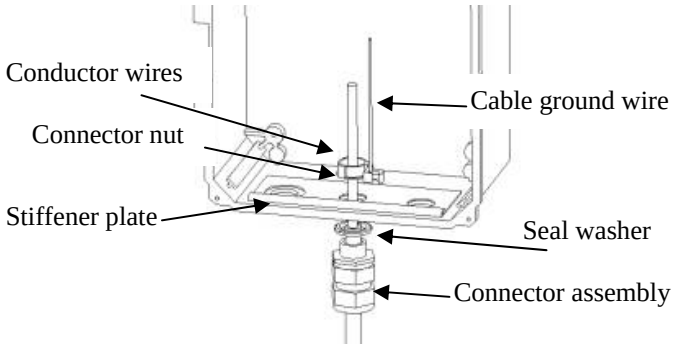

Figure 40 Armored Cable Installation

8.4.3 Transmitter Electrical Power Cable Installation

The right-most hole in the bottom of the transmitter box is used to bring electrical power into the transmitter box. The hole is sized for a 3/4 inch NPT fitting (1-1/16-inch diameter).

8.4.3.1 AC-Powered *SONARtrac*™

Any 50 or 60 Hz AC voltage can be applied to the power input terminals within the range of 100 – 240 VAC in the AC version of the *SONARtrac*™. Power cables of size 18-gauge (minimum) to 10-gauge (maximum), with a ground conductor, are required.

⚠	**WARNING** **Always use a non-current-carrying safety ground. Failure to use a non-current-carrying safety ground could result in injury or death.**
⚠	***WARNING*** ***For Class I, Division 2 installations, Power Entry and Inputs/Outputs must be installed in accordance with Article 501.10(B)(1) of the National Electrical Code ANSI/NFPA 70:2005.***
⚠	***CAUTION*** ***Always use a non-current carrying safety ground attached to the ground terminal on the input power terminal block. Failure to do so could result in poor system operation.***

Copyright © 2006 CiDRA Corporation

Feed electrical power wires through the fitting. Referring to the following figure, attach the ground wire (green) to the Ground (⏚) terminal , hot (black - U.S., brown - Eur) to the L (+) terminal, and neutral (white – U.S., blue – Eur) to the N (-) terminal.

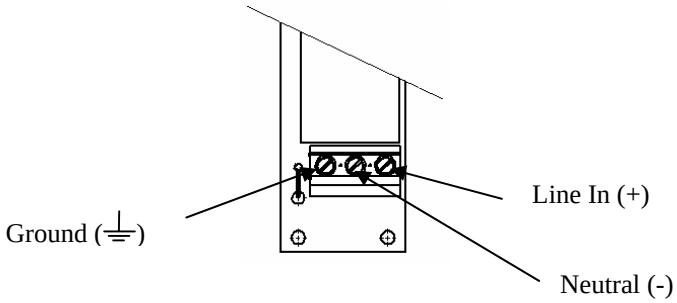

Figure 41 Transmitter Power Connection

8.4.3.2 DC-Powered *SONARtrac*™

Any voltage within the range of 18 – 36 VDC can be applied to the DC version of the *SONARtrac*™. Power cables of size 18-gauge (minimum) to 10-gauge (maximum), with a ground conductor, are required.

⚠	***WARNING*** ***For Class I, Division 2 installations, a non-current carrying safety ground attached to the ground terminal on the input power terminal block is required, and Power Entry and Inputs/Outputs must be installed in accordance with Article 501.10(B)(1) of the National Electrical Code ANSI/NFPA 70:2005.***
⚠	***CAUTION*** ***Always use a non-current carrying safety ground attached to the ground terminal on the input power terminal block. Failure to do so could result in poor system operation.***

Feed electrical power wires through the fitting. Referring to the previous figure, attach the ground wire to the Ground (⏚) terminal, DC+ to the L (+) terminal, and DC- to the N (-) terminal.

Copyright © 2006 CiDRA Corporation

8.4.4 Sensor Calibration Label

The sensor band is shipped with two labels attached to it. The label lists the sensor band part number, serial number, date of manufacture and three calibration factors. This information will be entered into the transmitter during setup.

If not done previously, install the Sensor Band Assembly label on the inside of the transmitter cover (the other label goes on the sensor head access panel).

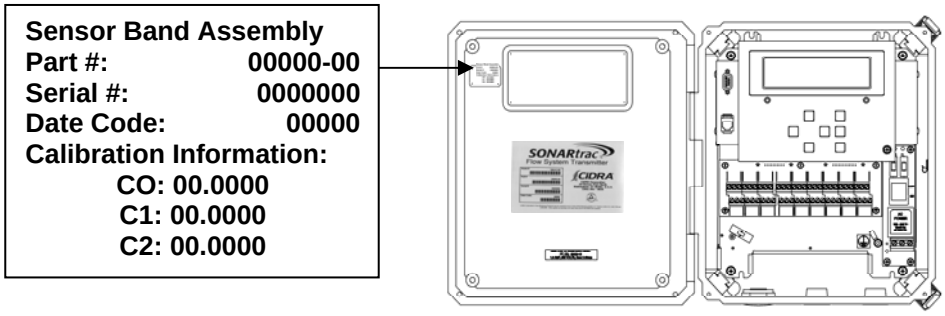

Figure 42 Sensor Calibration Label

Copyright © 2006 CiDRA Corporation

9 TRANSMITTER FUNCTIONS

The following section of this manual will present the transmitter layout and menus in the *SONARtrac*™ process monitoring system.

9.1 Transmitter Layout

The transmitter layout is depicted below. Here each of the major components is labeled.

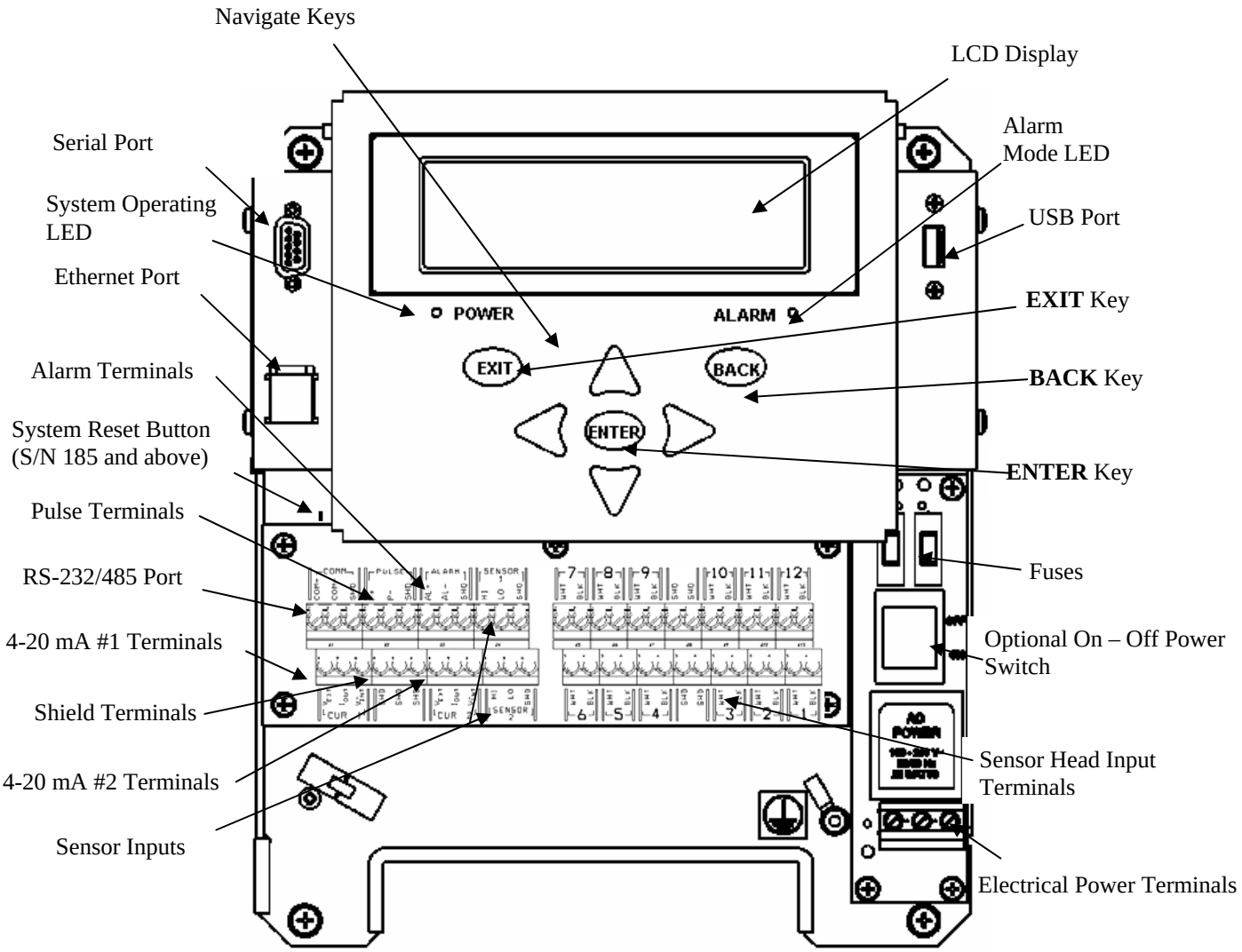

Figure 43 Transmitter Layout

9.2 Transmitter Output Definitions

The following figure shows a diagram of the output portion of the terminal board. The outputs of the transmitter are connected to communicate between the transmitter and other equipment.

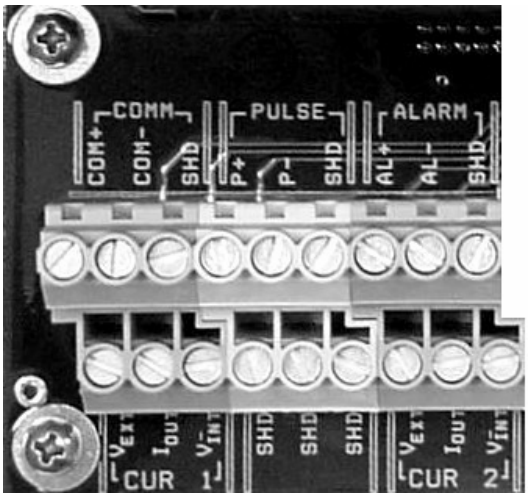

Figure 44 Transmitter Output Terminals

COMM – This denotes the connection point for serial digital communications. Either RS232 or RS485 communications is supported with baud rates settable between 2400 and 115200 baud (8 bits, no parity, 1 stop bit). The communications type (RS232/485) as well as the baud rate can be set by the front panel keypad as listed in a later section of the manual.

Note: If intermittent RS-485 communication problems are observed, it may be necessary to put bus terminations of 120 ohms at the extreme ends of the bus between COM+ and COM-. Should this be necessary, follow best practices in selecting the resistor and in connecting it reliably to the bus. ***However, it is a violation of Class I Division 2 rating of the SONARtrac™ transmitter to install the bus termination resistor physically within this enclosure. A different Class I Division 2 enclosure must be used to house the bus termination resistor if the SONARtrac™ transmitter is installed in a Class I Division 2 location.***

Copyright © 2006 CiDRA Corporation

PULSE – An isolated solid-state switch-closure-type output occurs between P+ and P- whenever conditions are met that are determined by the pulse setting within the transmitter. The maximum applied voltage between P+ and local ground and P- and local ground shall be within the range of +30V / -10V. The load current shall be a maximum of 100mA. Typical turn on time is 1 msec. Typical turn off time is 0.1 msec. Refer to the following figure and example.

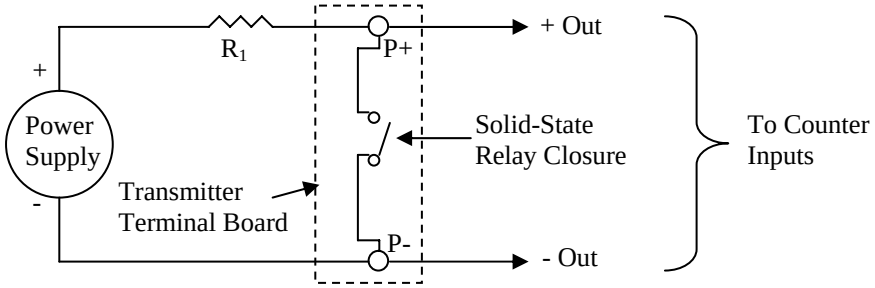

Figure 45 Pulse Switch Closure

For sizing R_1 refer to the following example.

Power Supply = 24V
Choose a value for R_1 so as to not exceed 100mA
R_1 = 24V / 100mA = 240Ω
Therefore, R_1 should be sized to be greater than 240Ω so the current does not exceed 100mA

ALARM – An electrically isolated switch closure occurs between AL+ and AL- whenever the limits specified in the transmitter setup for Alarm are met. These limits can be changed or disabled through the local keypad and display. The maximum applied voltage between AL+ and local ground and AL- and local ground shall be within the range of +30V / -10V. The load current shall be a maximum of 100mA.

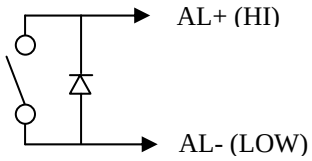

Figure 46 Alarm Switch Closure

Copyright © 2006 CiDRA Corporation

CUR1 – These terminals are used for connection to the primary 4-20mA output from the transmitter. The transmitter can be configured such that an external supply can be used for power (i.e. the 4-20mA loop current is driven externally) or such that the transmitter itself will power the loop. A combination of power wiring and internal software setting will ensure that the 4-20mA output will function properly. The following figures show proper wiring for internal and external power. The software configuration must be set to match the external wire connections for proper operation of this output. The primary 4-20mA output is the only 4-20mA output that supports HART communication.

CUR2 – These terminals are used for connection to the secondary 4-20mA output from the transmitter. As with the first 4-20mA line, the transmitter can be configured such that an external supply can be used for power or such that the transmitter itself will power the loop. A combination of power wiring and internal software settings will ensure the 4-20mA output will function properly. The software configuration must be set to match the external wire connections for proper operation of this output.

Internally Powered 4-20mA Loop Configuration - The hookup for a 4-20mA interface configured as "Internally Powered" is shown below. The maximum value of R_L is 500 Ohms. The voltage across R_L must be measured differentially. When internally powered, the 4-20mA interface is not electrically isolated from the rest of the transmitter electronics, so the V^-_{INT} connection is tied to a –10V reference internal to the transmitter and must not be connected to ground in the plant control system.

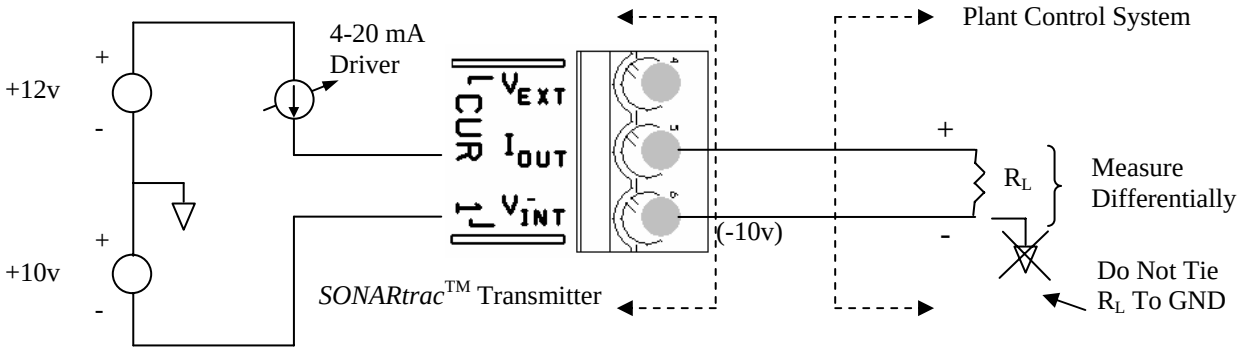

Figure 47 Internally (Transmitter) Powered 4–20mA Loop

Externally Powered 4-20mA Loop Configuration - The hookup for a 4-20mA interface configured as “Externally Powered” is shown below. The maximum value of V_{EXT} should be chosen such that the maximum applied voltage between V_{EXT} and local ground and I_{OUT} and local ground shall be within the range of +30V / -10V and current limited to 100mA. The maximum value of R_L is determined by the following equation:

$$R_{L\ Max} = (V_{EXT} - 8.35) / (0.022)$$

For example, with V_{EXT} = 24VDC:
$R_{L\ Max}$ = (24-8.35) / (0.022) = 711 Ohms

In the externally powered configuration the 4-20mA interface is capacitively isolated from the rest of the transmitter electronics provided that the applied voltages are within +30V / -30V.

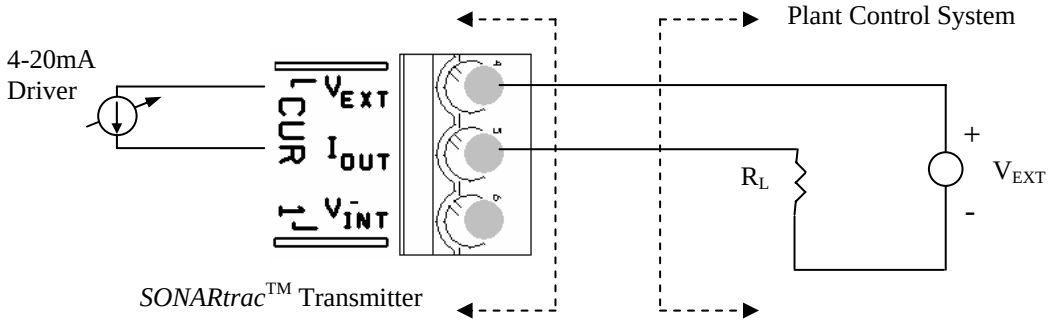

Figure 48 Externally Powered 4–20mA Loop

SHD - The three SHD (shield) terminals should only be used for grounding shields of any output wiring such as connections to CUR 1 or CUR2. These should not be used for the SENSOR 1 or 2 shields nor for the Sensor Head To Transmitter cable shield. Only one end of the shield wire should be connected to eliminate shield currents.

Copyright © 2006 CiDRA Corporation

9.3 Transmitter Input Definitions

Entrained Air calculations use inputs of pressure and temperature. These inputs can be made through the use of pressure and temperature transducers, or alternatively, an assumed value for pressure and temperature can be input into the transmitter during its setup.

Two transmitter terminal blocks (shown below) are provided for pressure and temperature transducers.

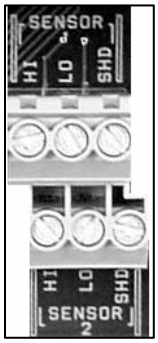

Figure 49 Transmitter Sensor Terminals

SENSOR 1 & 2 – Used in certain installations for inputs from user-supplied loop powered 4-20mA pressure or temperature transmitters which the *SONARtrac*™ transmitter supplies with a nominal +24V. The pressure or temperature transmitter electrical connections must be isolated from ground ("floating"). ***Note that per the SONARtrac System Control Drawing (CiDRA 20332-01, found in Appendix C) these connections are not non-incendive field wiring and there are no entity parameters provided. In general, this means that these inputs cannot be directly connected to pressure or temperature transmitters located in Class I, Division 2 locations or any other hazardous (classified) locations unless additional precautions as defined by the pressure or temperature transmitter manufacturer are taken (e.g. zener barriers). See the Class I, Division 2 installation instructions provided by the manufacturer of the pressure or temperature transducers and those of the zener barrier manufacturer for guidance in achieving a safe installation.***

Copyright © 2006 CiDRA Corporation

9.4 Keypad

The keypad controls used to set up and access the user input screens are illustrated in the following figure.

Figure 50 Transmitter Front Panel Keyboard

The *SONARtrac*™ display has 2 distinct modes: the **operational mode** where the measured parameters are displayed and the **menu mode** where various system parameters can be set. In each of these modes the keypad will have different functions. The following table shows the function of each key in the keypad depending on the display mode. Menu traversal rules are based on the following table.

Key	Operational Mode	Menu Mode		Dialog Box
		Navigation	Editing	
Up ▲	Enter Menu Mode	Cycle Menu Item	Change current value at cursor position	Exit Dialog
Down ▼	Enter Menu Mode	Cycle Menu Item	Change current value at cursor position	Exit Dialog
Left	Enter Menu Mode	NA	Change cursor position	Exit Dialog
Right ➤	Enter Menu Mode	NA	Change cursor position	Exit Dialog
EXIT	Enter Menu Mode	Exit Menu	Exit Menu	Exit Dialog
BACK	Enter Menu Mode	Exit Menu from Main Menu or back up one level in menu tree	Exit editing mode without saving	Exit Dialog
ENTER	Enter Menu Mode	Change menu level or start editing	Exit editing mode and save current value	Exit Dialog

Table 7 Keypad Functions in Operational and Menu Modes

Copyright © 2006 CiDRA Corporation

9.5 Transmitter Display

The transmitter display functions in two distinct modes: an operational mode and a menu mode. These two modes will be explained in the following sections.

9.5.1 Operational Mode

The transmitter screen displays the status of the *SONARtrac*™ system. A few typical screen messages and their interpretation follow.

9.5.1.1 System Start

The transmitter displays the startup progress as it loads firmware into various parts of the system and the Ethernet IP address of the transmitter as it starts up. Once startup is complete, the display will clear and begin displaying measurements. Full system startup is discussed in Section 10.

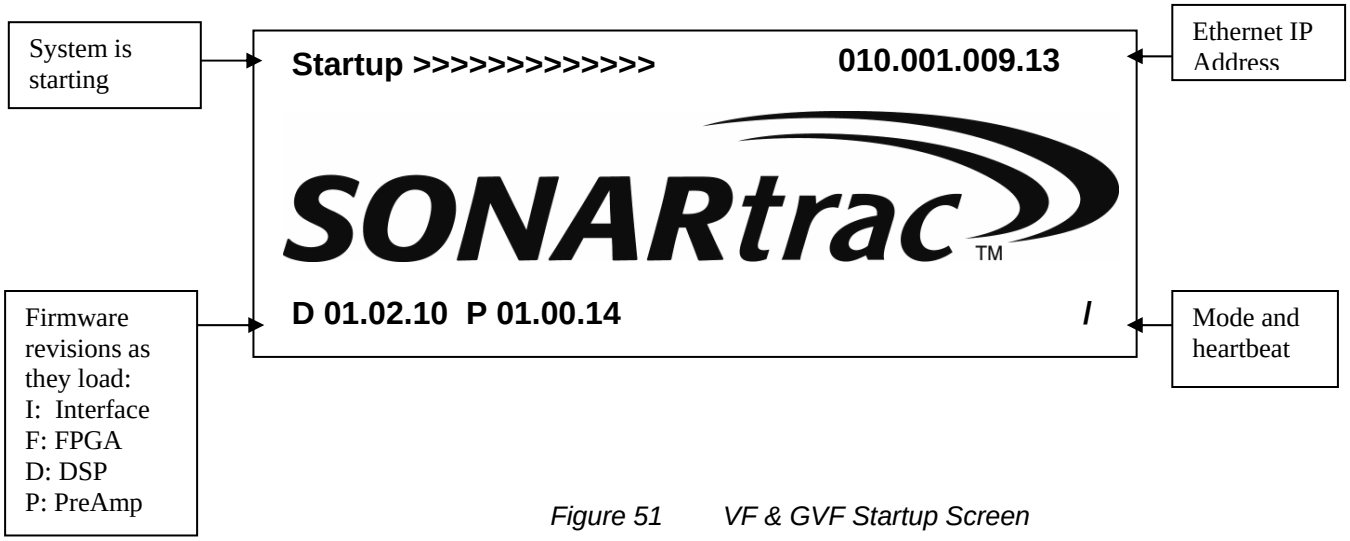

Figure 51 VF & GVF Startup Screen

If internal configuration parameters are changed in the menu screens once the menu is exited, the display will clear and show the 'Startup >>>>' display. This indicates that the system is restarting with the new parameters and is beginning to make measurements. Flow and GVF measurements will be displayed when the startup procedure is complete.

Copyright © 2006 CiDRA Corporation

9.5.1.2 Operating Transmitter Display

In operating mode the display screen is split into three distinct portions. The majority of the screen is devoted to a 2-line measurement display as illustrated below. The bottom portion of the screen will display status and configuration information.

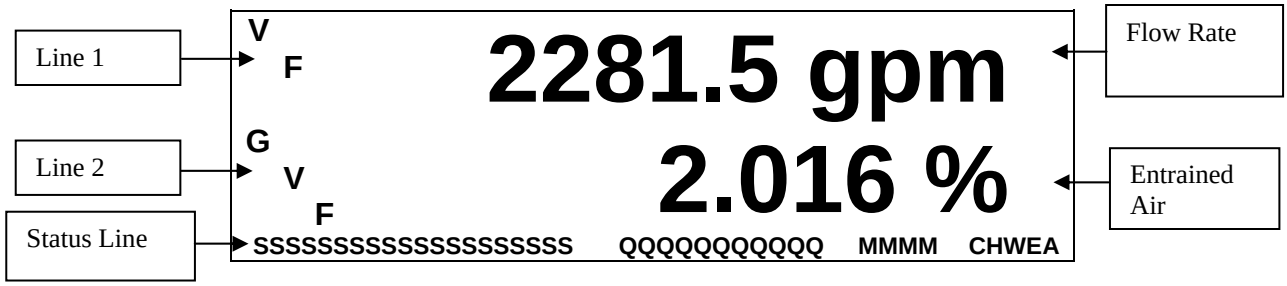

Figure 52 Operating Transmitter Display

9.5.1.2.1 Line 1 / Line 2

Either line may be configured to display any of the values listed below.

Value	Units
Flow Rate	Users selectable list of values
Totalizer	Users selectable list of values
Gas Volume Fraction	Percent (%)s
Speed Of Sound	Feet per Second (fps) or Meters per Second (mps)
Blank	Line is blank

Table 8 Line 1 and Line 2 Values

9.5.1.2.2 Status Line

The code for information in the status line shown in Figure 52 are defined as follows:

ID	Characters	Description	Values
S	20	Status Messages	See Status Messages Table below
Q	11	Quality Field	See Quality Field Message Table below
M	4	Mode	See Operating Mode Message Table below
C	1	Communications	E – Ethernet or S – Serial
H	1	Hart Activity	H – Hart Message received or [blank] – No Activity
W	1	Write Protect	W – Write Protected or [blank] – Not Write Protected
E	1	Event Log Updated	! – Event Log Updated or [blank] – No change to Event Log since last check
A	1	Activity	|/-\ (Cycle changes indicate activity)

Table 9 Status Line Code

Copyright © 2006 CiDRA Corporation

- **Status Messages - 'S':**

A number of status messages can be displayed in the 20 character status message field. They are as follows:

Mode	Description
INITIALIZE MODE	DSP is acquiring data to calculate a measurement
VF INITIALIZE MODE	DSP is acquiring data to calculate a flow measurement
GVF INITIALIZE MODE	DSP is acquiring data to calculate a GVF measurement
INVALID SOS DATA	DSP is acquiring data to calculate a SOS measurement
BELOW MIN VF QUALITY	Quality of measured sensor data is below a configured minimum for a Vortical Flow measurement
BELOW MIN SS QUALITY	Quality of measured sensor data is below a configured minimum for a GVF measurement
BELOW MIN QUALITY	Quality of measured sensor data is below a configured minimum for VF and SOS measurement
SENSOR OVERLOAD	DSP indicates sensors are overloaded
DSP FAILURE - n	A DSP communication error occurred

Table 10 Status Line Messages

- **Quality Messages 'Q':**

The Quality Field is a diagnostic field that can be used to view certain quality values in the transmitter. The factory default is none. If more than one quality is selected, the transmitter will cycle through each. The options for display are speed of sound, pressure and temperature (if used), band temperature, and a 3-level quality metric. The 3-level fields represent a Red/Yellow/Green setting for the quality of the output data. The yellow quality is the bounded value where data can be considered valid, but is not fully reliable. Red indicates unusable, and green indicates a good measurement. Note that the quality field is not user programmable.

Quality Message	Description
VQ or SQ '-1 to +1'	Quality metric of the flow (VQ) or Speed of Sound (SQ) measurement is between –1 and +1; +1 is the most robust measurement the system can make
RED	Quality metric is below the minimum quality factor entered into the transmitter or the meter is in startup mode
YEL	Quality metric is usable but not highly reliable
GRN	Quality metric is highly reliable
B	Band temperature (°C)
T	Process temperature (either from remote sensor or programmed into system, user selectable °C or F) (if used)
P	Process pressure (either from remote sensor or programmed into system, user selectable units) (if used)

Table 11 Quality Message Definitions

Copyright © 2006 CiDRA Corporation

- **Mode Messages – ‘M’:**

The four character mode field is used to display the operating mode of the system. Their definitions are as follows:

Mode Message	Description
‘IDL’	Idle / Stop Mode
‘RAW’	Transferring raw data
‘SNG’	Performing a single measurement
‘GVF’	Running in Gas Volume Fraction / Speed Of Sound mode
‘VF’	Running in VF mode
blank	Running in VF / GVF / SOS mode

Table 12 Mode Message Definitions

- **Communications (C):**

Indicates a connection (Ethernet) or activity (Serial). No received serial messages for 10 seconds will clear the Serial indicator.

- **HART Activity (H):**

Indicates a recent HART message processed by the transmitter. No received HART messages for 10 seconds will clear this indicator.

- **Write Protect (W):**

Indicates configuration changes cannot be made to the transmitter. Write Protect can be turned on and off via the menu or HART. Default is OFF.

- **Event Log Update (!):**

A failure event has been saved in the Event Log, accessible from the front panel menu. Blank means no change to event log since last accessed.

- **Activity (*/-\|*):**

Indicator will cycle during normal system operation

Copyright © 2006 CiDRA Corporation

9.5.1.3 Display Examples

The following figure shows the display when the system is collecting data to calculate a measurement. The '------' indicates the system is unable to make a measurement, or an internal parameter was changed that has caused the system to re-initialize.

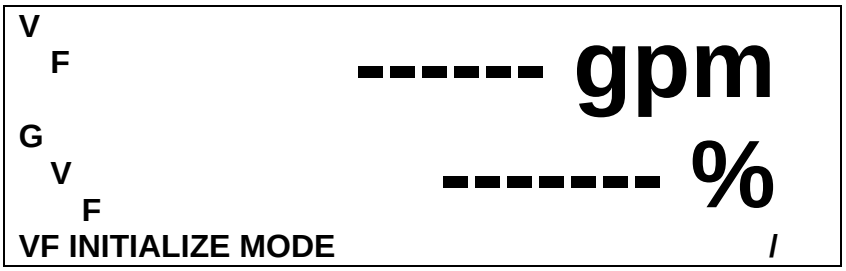

Figure 53 Initialization Mode

In the following display the system is making a measurement. The flow rate is 2281.6 gpm and the entrained air of GVF reading is 2.016 %. The quality metric associated with the GVF measurement (SQ) is .72.

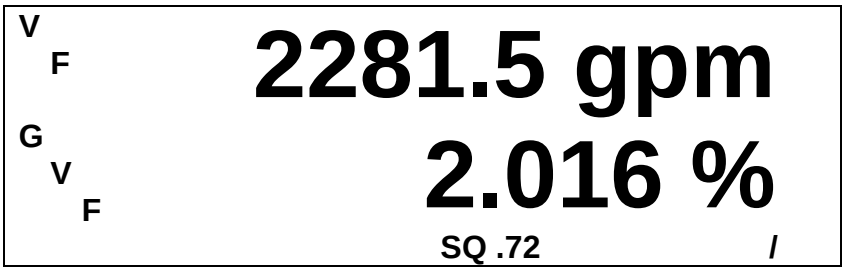

Figure 54 VF & GVF-100 Measurement Screen

9.5.2 Menu Mode

This mode of operation permits the user to adjust various settings on the *SONARtrac*™ transmitter as well as perform multiple diagnostic tests. The menu system is set up in a tree format, with seven top level categories (illustrated in bold print below) that can each have up to two levels of sub menus. The menu structure is shown in the table on the following page.

Copyright © 2006 CiDRA Corporation

BASIC CONFIG	
SENSOR SERIAL #	
PIPE SIZE	ID/Wall
	Size/Sch
	OD/Wall
PIPE MATERIAL	
FLUID PROPERTIES	
	Spec Gravity
	SOS (ft/s)
	Viscosity (Pa-s)
PRESSURE	
TEMPERATURE	
PRESSURE SEL	
TEMP SEL	
ALTITUDE	
CALIBRATION	C0
	C1
	C2
FLOW DIRECTION	Forward/Reverse
OP MODE	VF/GVF/VF&GVF
SET DATE/TIME	MM/DD/YY hh:mm:ss

OUTPUT CONFIG	
4-20mA CH 1	Output Sel
	Power Sel
	Low End
	High End
	Out Of Range
	Overrange Rail
	4mA Trim
	20mA Trim
4-20mA CH 2	Output Sel
	Power Sel
	Low End
	High End
	Out Of Range
	Overrange Rail
	4mA Trim
	20mA Trim
PULSE	Multiplier
	Width (ms)
	Lowcut
	Output Sel
ALARM CONTROL	Warning
	Critical
	Manual Clear
ALARM WARN THRESHOLD	
	Flw/GVF Min/Max
ALARM CRIT THRESHOLD	
	Flw/GVF Min/Max
VF & GVF DAMPING FILTER	
	State
	Time Const (S)
GVF & VF NOISE FILTER	
	State
	Magnitude
GVF & VF SPIKE FILTER	
	State
	Length
	Percent / Delta

INPUT CONFIG	
SENSOR #1	Units
	Scale (per mA)
	Offset (mA)
SENSOR #2	Units
	Scale (per mA)
	Offset (mA)

CUSTOMIZE	
DISPLAY	Line 1
	Line 2
	Contrast
SENSOR SETUP	State
FLOW UNITS	Volume
	Time
	User Vol Label
	User Vol Base
	User Vol Scale
	User Time Label
	User Time Base
	User Time Scale
SOS UNITS	Units
FLOW CUTOFF RANGE	
	Low End
	High End
TOTALIZER	Units
	Lowcut Enable
	Lowcut
	Multiplier
	Reset
	Input
WR PROTECT MODE	

COMMUNICATIONS	
ETHERNET	IP Address
	Subnet Mask
SERIAL OPTIONS	Baud Rate
	Config
HART	Preambles
	Resp. Preambles
	Univ. Cmd. Rev.
	Polling Address
	Find Device Arm
RESET COMMS	

DIAGNOSTICS	
SENSOR CHECK	
4-20mA TEST	
GAIN	Autoset Gain
	Check/Set Gain
	Test Gain
SELF TEST	RAM Test
	DPRAM Test
KEYBOARD TEST	
CLEAR HISTORY	
PARAM EDIT	Passkey
	Algorithm
MONITOR	Passkey
	System Monitor
	Sensor Monitor

INFO
REVISIONS
DIAGNOSTIC
CONFIGURATION
EVENT LOG
SENSOR MAX/MIN

Table 13 SONARtrac™ VF & GVF-100 Menu Diagram Software Release 03.03.XX

Copyright © 2006 CiDRA Corporation

When the display is in operational mode, any key pressed will enter menu mode. In this mode the keypad is used for traversing the menu tree and for modifying system parameters as previously detailed in Table 13. In menu mode the screen is divided into four lines of information. The following figure shows an example of a typical menu screen.

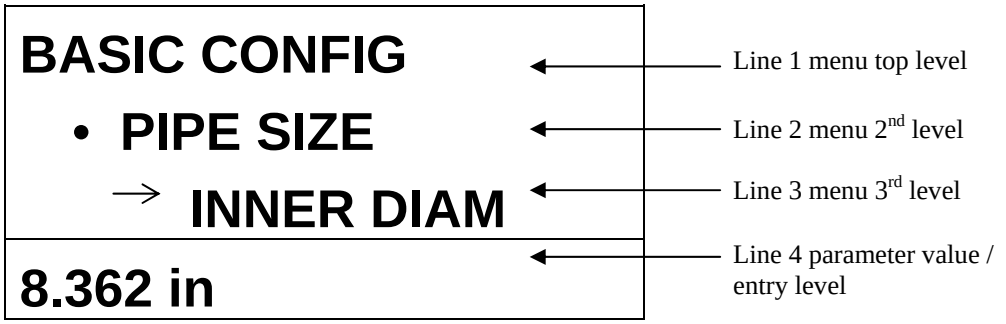

Figure 55 Typical Menu Screen

The top three lines of text represent the three levels of the menu. The arrow shown to the left of "INNER DIAM" in this example shows which level of the menu is currently selected. The fourth line of the display shows the current value of the menu parameter. When a value is shown on the fourth line pressing the 'ENTER' key will permit editing of this value.

The following figure shows an example of the screen while editing the 'INNER DIAM.' parameter. When editing a parameter two different editing modes are used. This figure shows an example of editing a parameter by digits, where each digit is adjusted individually. In this mode the left & right arrow keys are used to move between digits and the up & down arrow keys will increment or decrement the digit.

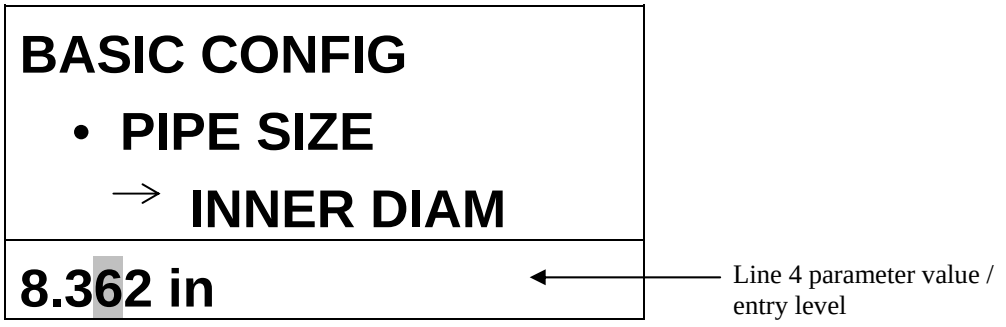

Figure 56 Editing Parameter By Digits

Copyright © 2006 CiDRA Corporation

The following figure shows an example of the second type of parameter editing. In this case the whole parameter is highlighted and the up and down arrow keys will cycle between the available settings.

When editing a parameter the ‘ENTER’ key will accept and save the current value. Alternatively the ‘BACK’ key will revert the current parameter to the value before editing was begun. The ‘EXIT’ key will also revert to the previous value (similar to the ‘BACK’ key) and will exit Menu mode. While in Menu mode the screen will return to operational mode and resume operation after 5 minutes of inactivity.

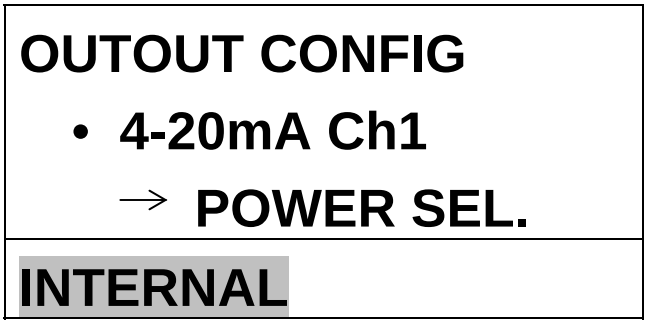

Figure 57 Editing Whole Parameter

Table 14 on the following pages gives details on the full menu tree.

Copyright © 2006 CiDRA Corporation

Table 14 Transmitter Menu Tree Software Release 03.03.XX

Level 1	Level 2	Level 3	Range	Description
Basic Config	Sensor Serial #		0000000	Serial number of sensor band
	Pipe Size	ID/Wall	ID: 1- 100 in (25.4-2540mm) Wall 0 – 100 in (0 to 2540 mm)	Pipe inner diameter and wall thickness
		Size/Sched	2 to 36" size; schedule	Pipe size & schedule
		OD/Wall	ID: 1- 300 in (25.4-7260mm) Wall 0 – 100 in (0 to 2540 mm)	Pipe outer diameter and wall thickness
	Pipe Material		SST, CS, PVC, Custom	Enters the pipe modulus, kilo-Pascal
	Fluid Properties	Spec Gravity	0 - 999999	Enters the specific gravity; default water at 25 °C and 14.7 psia
		SOS (ft/s)	0 - 999999	Sound speed in media of interest; ft/sec; default water at 25 °C and 14.7 psia
		Viscosity	0.0000 e-38 to 9.9999 e+38	Enters the liquid viscosity in Pa-sec; default water at 25 °C and 14.7 psia
	Pressure		+/- 0-999999	Process pressure; PSIg, Barg, kPag
	Temperature		-999 to +999C -1766 to 1830F	Process temperature; °C or F
	Pressure Sel		Fixed, Sensor #1 or #2	Allows for selecting a fixed pressure input or using the inputs of sensor #1 or #2
	Temperature Sel		Fixed, Sensor #1 or #2	Allows for selecting a fixed temperature input or using the inputs of sensor #1 or #2
	Altitude		-50,000 to +50,000	Process pipe altitude above / below sea level; feet or meter
	Calibration	C0 term	0.0000 e-38 to 9.9999 e+38	First term coefficient
		C1 term	0.0000 e-38 to 9.9999 e+38	Second term coefficient
		C2 term	0.0000 e-38 to 9.9999 e+38	Third term coefficient

Copyright © 2006 CiDRA Corporation

Table 14 Transmitter Menu Tree Software Release 03.03.XX (page 2)				
Level 1	**Level 2**	**Level 3**	**Range**	**Description**
Basic Config (cont)	Flow Direction		Forward, Reverse	Sets direction of sensor head relative to flow
	Op Mode		Flow/GVF/SOS or Flow or GVF/SOS	Allows for selecting the operational mode of the transmitter
	Set Date/Time	MM/DD/YY HH:MM:SS		Current date/time; adjust for daylight savings as required

Copyright © 2006 CiDRA Corporation

Table 14 Transmitter Menu Tree Software Release 03.03.XX (page 3)

Level 1	Level 2	Level 3	Range	Description
Output Config	4-20mA Ch1& Ch2	Output Sel	Flow Rate, SOS, GVF, Blank	Parameter to output
		Power Sel	Internal, External	Power supply for 4-20mA current
		Low End	Based on 'output sel'	Low end output (4mA)
		High End	Based on 'output sel'	High end output (20mA)
		Out of Range	Hold, >20mA, <4mA, 4mA	Behavior when meter reading is out of range or meter has no reading
		Overrange Rail	Enable, Disable	'Enable' causes the output to go to full (20mA) or min (4mA) when system over ranges
		4mA Trim	2 to 6	Adjust 4mA output
		20mA Trim	18 to 22	Adjust 20mA output
	Pulse	Multiplier	0 - 999999	Multiplier on output
		Width (ms)	.5,1,20,33,50,100	Pulse width
		Lowcut	0 % to 100 %	Low end cutoff
		Output Sel	Flow Rate, Totalizer, Flow Rate%, GVF, SOS	Parameter to output
	Alarm Control	Warning	Off/On	Activates alarm warning function
		Critical	0 % to 100 % Off/On	Activates alarm critical function
		Manual Clear	Off/On	Allows for manual or automatic alarm clearing
	Alarm Warning Threshold	Flw Min	0-100% of range	Used to set the minimum and maximum values for a warning alarm
		Flw Max		
		GVF Min		
		GVF Max		
	Alarm Critical Threshold	Flw Min	0-100% of range	Used to set the minimum and maximum values for a critical alarm
		Flw Max		
		GVF Min		
		GVF Max		

Table 14 Transmitter Menu Tree Software Release 03.03.XX (page 4)

Copyright © 2006 CiDRA Corporation

Level 1	Level 2	Level 3	Range	Description
Output Config (cont)	Flow & GVF Damping	State	Enable, Disable	Enable Damping
		Time Constant (s)	0-600 seconds; default is 3	Smoothes output due to rapid changes in flow
	Flow & GVF Noise Filter	State	Enable, Disable	Enable noise filtering
		Magnitude	Low, High	Amount of damping
	Flow & GVF Spike Filter	State	Enable, Disable	Enable spike filtering
		Length	2 - 60 readings	# of measurements to validate
		Percent or Delta	0 – 100 %	% of full measurement range that will define the spike size to be rejected

Copyright © 2006 CiDRA Corporation

Table 14 Transmitter Menu Tree Software Release 03.03.XX (page 5)

Level 1	Level 2	Level 3	Range	Description
Input Config	Sensor #1	Units	PSIg, None, F, C, Barg, kPag	Parameter input
		Scale	0.0000 e-38 to 9.9999 e+38 per mA	Input range divided by mA range
		Offset	0.0000 e-38 to 9.9999 e+38 per mA	Correction due to a non-zero mA minimum output
	Sensor #2	Units	PSIg, None, F, C, Barg, kPag	Parameter input
		Scale	0.0000 e-38 to 9.9999 e+38 per mA	Input range divided by mA range
		Offset	0.0000 e-38 to 9.9999 e+38 per mA	Correction due to a non-zero mA minimum output

Copyright © 2006 CiDRA Corporation

Table 14 Transmitter Menu Tree Software Release 03.03.XX (page 6)

Level 1	Level 2	Level 3	Range	Description
Customize	Display	Line 1	Blank, GVF, SOS, Flow Rate, Totalizer, Flow Rate %	Parameter displayed on line 1
		Line 2	Blank, GVF, SOS, Flow Rate, Totalizer, Flow Rate %	Parameter displayed on line 2
		Contrast	0 to 1024 (default 170)	Contrast of display
	Sensor Setup	State	On/off	Enable / disable each sensor
	Flow Units	Volume	gal, l, m^3, user, ft^3, igal, ft, m	Flow units
		Time	d, h, m, s, user	Time units
		User Vol Label	User defined	Custom flow volume label
		Use Vol Base	gal, l, m^3, ft^3, igal, ft, m	Base units for custom volume label
		User Vol Scale	0.0000 e-38 to 9.9999 e+38	Scale factor on custom volume base
		User Time Label	User defined	Custom time label
		User Time Base	d, h, m, s	Base units for custom time label
		User Time Scale	0.0000 e-38 to 9.9999 e+38	Scale factor on custom time base
	SOS Units	Units	ft/sec, m/sec	Sound speed units
	Flow Cutoff Range	Low End	0% to 100% (3 to 30 ft/s)	Under this value '<min flow' will be displayed
		High End	0% to 100% (3 to 30 ft/s)	Over this value '>max flow' will be displayed
	Totalizer	Units	gal, l, m^3, ft^3, user def	Units for totalizer
		Lowcut Enable	Enable, Disable	Turns totalizer lowcut on / off
		Lowcut	0% to 100% (3 to 30 ft/s)	Flow values below this will not be used for totalizer
		Multiplier	M, k, 1	Total Multiplier
		Reset		Reset totalizer value
		Input	Vol Flow	Totalized flow basis
	Wr Protect Mode		Enable, Disable	When enabled no other parameters can be changed

Copyright © 2006 CiDRA Corporation

Table 14 Transmitter Menu Tree Software Release 03.03.XX (page 7)

Level 1	Level 2	Level 3	Range	Description
Communications	Ethernet	IP Address	0.0.0.0 to 255.255.255.255	Current IP address
		Subnet Mask	0.0.0.0 to 255.255.255.255	Current Subnet Mask
	Serial Options	Baud Rate	2400 to 115200	Serial baud rate
		Config	RS232 or RS485	Serial communications protocol type
	HART	Preambles	5 - 20	# Preamble chars ahead of MSG
		Resp. Preambles	5 - 20	# Preambles in response from transmitter. Change to match HART communicator
		Univ. Cmd. Rev.	5 or 6	Major protocol Revision 5, or Revision 6
		Polling Address	0 - 15	Non-zero for multi-drop connections =0 for single connection
		Find Device Arm	Enable, Disable	When ‘Enabled”, makes transmitter respond to HART “Find Device” command
	Reset Comms			Resets communications ports without re-booting transmitter

Copyright © 2006 CiDRA Corporation

Table 14 Transmitter Menu Tree Software Release 03.03.XX (page 8)

Level 1	Level 2	Level 3	Range	Description
Diagnostics	Sensor Check		PASS or FAIL. (Indicate which sensors failed test)	Performs health check on each sensor
	4-20mA Test		Test 4-20mA outputs from 4 to 20mA	Manual testing of 4-20mA output #1 and 2
	Gain	Autoset Gain	1.0, 4.65, 21.55, 98.65	Provides auto adjustment of pre-amplifier setting based on the current process operating condition
		Check/Set Gain	1.0, 4.65, 21.55, 98.65	Provides for manual checking and setting of pre-amplifier gain. Autoset Gain can override set point
		Test Gain	PASS or FAIL	Test preamp to determine if gain falls within range of AGC parameters
	Self Test	RAM Test	PASS or FAIL	System memory test
		DPRAM Test	PASS or FAIL	Dual port memory test
	Keyboard Test		Red LED illuminates indicating key is functional	Test keyboard operation
	Clear History	Reset		Resets data history
	Param Edit	Passkey		Rarely used diagnostic feature. Contact CiDRA Technical Support
		Algorithm		
	Monitor	Passkey		Factory Technical Support diagnostic feature
		System Monitor		
		Sensor Monitor		

Copyright © 2006 CiDRA Corporation

Table 14 Transmitter Menu Tree Software Release 03.03.XX (page 9)

Level 1	Level 2	Level 3	Range	Description
Info	Revisions			Provides a list of installed hardware and software
	Diagnostic			Provides a list of key system temps, volts, status
	Configuration			Summary of the system setup
	Event Log			Log of system events (i.e. errors, sensor over ranges, etc.)
	Sensor Max/Min			Maximum and minimum sensor signal magnitudes

Copyright © 2006 CiDRA Corporation

Each of the system parameters listed above can be accessed and modified using the front panel keypad. Any changes made to any of these parameters will be saved in non-volatile memory and will not be lost when power is removed from the transmitter.

Several of the parameters have direct links to other parameters found in different locations in the menu structure. Therefore, it is possible that by changing the value of one parameter it will automatically change the other linked parameter. An example of this occurs in the 'Pipe Size' sub-menu. Each of the parameters under this sub-menu: 'ID/Wall', 'Size/Sched', and 'OD./Wall' are directly linked to the others and they all address the inner diameter of the pipe. In this case only one of these parameters can be active at any one time. Whenever any one of these is selected it becomes the active parameter and the others are blanked (this is shown by ----- under these parameters). To change which parameter is used by the meter, a different one can be selected and a value entered.

.

Copyright © 2006 CiDRA Corporation

10 TRANSMITTER SETUP

10.1 Transmitter Menus

The following pages present the steps necessary to setup and operate the *SONARtrac*™ VF & GVF-100 system.

Whenever a transmitter front panel entry is made, the transmitter will re-start and output to the plant control or data logging system will be interrupted. It is recommended that the process control room be alerted prior to accessing the transmitter front panel.

CAUTION

Loss of transmitter output signal may occur when accessing transmitter front panel keys. Contact process control room and advise them the transmitter may be off line.

10.1.1 Basic Config Menu

These inputs **must be made** when installing a system.

- **Sensor Serial #**

The serial number assigned to each sensor band. This identifier is found on the sensor band, and on the label previously attached to the sensor cover access panel and the transmitter.

- **Pipe Size**

Input based on the pipe the system is installed on. Input can be based on '**ID/Wall** (pipe inner diameter / wall thickness)', or calculated by the transmitter from the inputs of '**OD/Wall**' (pipe outer diameter / wall thickness) or '**Size/Sched**' (pipe size / schedule).

- **Pipe Material**

Used to input the modulus of the process pipe material in units of kPa. Menu selections for steel, stainless steel, PVC and custom values for other pipe materials are selectable from the menu.

- **Fluid Properties**

'**Specific Gravity**' - Input is default to water at 25 ºC and 14.7 psia. Refer to Appendix E for unit conversions and Appendix F for other temperatures and pressures. 'Custom user selectable values can also be set.

'**SOS**' – Used to input the nominal sound speed of the process fluid. Water at 25ºC and 14.7 psia is the default; custom values can be input. Refer to Appendix F for additional values for water at different temperatures and pressures.

Copyright © 2006 CiDRA Corporation

'**Viscosity**' - Input is default to water at 25 ºC and 14.7 psia. Refer to Appendix E for unit conversions and Appendix F for other temperatures and pressures. 'Custom user selectable values can also be set.

- **Pressure**

This input is an important parameter for accurate GVF measurement. If the process pressure is constant, input the normal process operating pressure into the transmitter in units of PSIg, Barg or kPag.

For applications where the process pressure varies, it is recommended that a correction for pressure be performed in the process control system. Alternatively, a pressure transmitter can be input to the *SONARtrac*™ transmitter as described in **Pressure Sel** below.

If a plant control system is used to correct for pressure, the correction at the control system is made as follows:

$$GVF_{act} = GVF_{meas} * [(P_{proc} + P_{atm})/(P_{trans} + P_{atm})]$$

where: GVF_{act} = the GVF corrected for pressure
GVF_{meas} = the GVF reported by the transmitter
P_{atm} = 14.696 if at sea level, correct for elevation if necessary (psia)
P_{proc} = the pressure from the pressure transducer (psig)
P_{trans} = the pressure input to the transmitter (psig)

If a pressure transmitter is connected to the *SONARtrac*™ transmitter, the calculation above is performed by the *SONARtrac*™ unit and no pressure correction should be made in the process control system.

- **Temperature**

Used to input the approximate process / fluid temperature (in ºC or ºF) expected. A pressure transmitter can be input to the *SONARtrac*™ transmitter as described in **Temperature Sel** below.

This input has minimal affect on GVF calculation.

- **Pressure Sel**

Used to select if the pressure values for calculating GVF will be fixed (that is, assumed to be steady state and use the values input earlier during GVF set up), or if the values will be based on a pressure transducer. If the values are based on a pressure transducer, user must configure the sensor inputs in the '**Input Config**' menu.

- **Temperature Sel**

Used to select if the temperature values for calculating GVF will be fixed (that is, assumed to be steady state and use the values input earlier during GVF set up), or if the values will be based on a temperature transducer. If the values are based on a temperature

Copyright © 2006 CiDRA Corporation

transducer, user must configure the sensor inputs in the '**Input Config**' menu.

- **Altitude**

Used to calculate the atmospheric pressure corrected for elevation. Enter the elevation above or below sea level.

The following equation is used within the transmitter to correct for elevation.

$$P_{atm} = 14.696 * [1 - ((Alt * 10^{-3})/145.45)]^{5.2561}$$

where: P_{atm} = absolute atmospheric pressure corrected for altitude (psi)
Alt = altitude (feet)

- **Note: If an "absolute" scaled pressure transducer is used it is not necessary to enter altitude.Calibration**

Calibration factors are specific to a given pipe size and wall thickness. The value for '**C0**' term, '**C1**' term, and '**C2**' term are found on the sensor band, and on the label that attaches to the sensor cover access panel and on the transmitter inner door.

- **Flow Direction**

Input ('**Forward**' or '**Reverse**'**)** is used if the sensor is installed with flow indicating arrows opposite the actual flow within the process pipe. It is also used if the flow within the pipe is reversed.

- **Op Mode**

Used to select the operational mode of the meter. For combined VF & GVF operation the Op Mode is set to '**FLOW/GVF/SOS**'. If single parameter mode is desired, either '**VF**' or '**GVF/SOS**' can be selected.

- **Set Date/Time**

The date and time is entered in the transmitter in order to set the time stamp that will be applied to data downloaded on the USB Port (discussed later in this manual). Whenever possible, the time and date should to be synchronized to the process control system. **Note:** The time is not automatically updated to reflect daylight savings time.

10.1.2 Output Config Menu

These inputs are used to configure the various outputs from the transmitter.

- **4-20mA (CH 1 & CH 2)**

Several selections are available for outputting under the '**4-20mA**' setup menu screens.

The **'Output Sel'** sub-menu selection permits selection of the parameter to output on the 4-20mA channels. The GVF meter permits

selection of the '**GVF**', '**SOS**', '**Flow Rate**', or '**Blank**' for no display as the output parameter.

The '**Power Sel**' selection is used to specify whether '**Internal**' power or '**External**' power is used to drive the 4-20mA current output.

The '**Low End**' and '**High End**' menu selections allow the user to change the upper and lower values that are output on the 4-20mA channel. For SOS reporting this is based on 5,000 ft/sec as the maximum output value. For GVF (entrained air reporting this is based an 100% as the upper limit. For Flow Rate, this is based on the percentage of the total flow range of the meter.

The following figure gives an example screen shot of a user specified '**Low End**' setting for 4-20mA CH1. The user settable percentage is located on the left side of the bottom line of the display, with the corresponding sound speed value shown on the right. The percentage represents a point within the output range of the meter. This is represented by 0%=0 ft/s and 100%=5000 ft/s. As the percentage is changed between 0 -100%, the corresponding sound speed value is indicated.

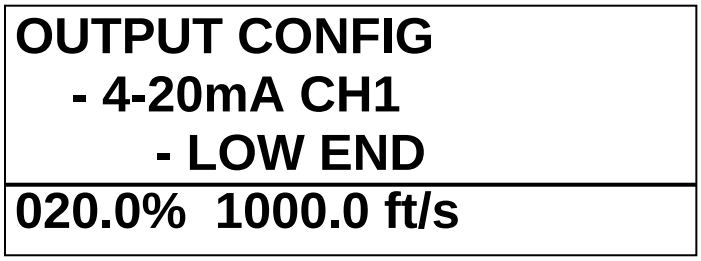

Figure 58 Low End Output Configuration Example Screen

The following figure gives an example screen shot of a user specified '**High End**' setting. The user settable percentage is located on the left side of the bottom line of the display, with the corresponding flow value shown on the right. The percentage represents a point within the output range of the meter. This is represented by 0%=0 gpm and 100%=25989.7 gpm for this particular meter. As the percentage is changed between 0-100%, the corresponding flow value is indicated in the currently selected flow units.

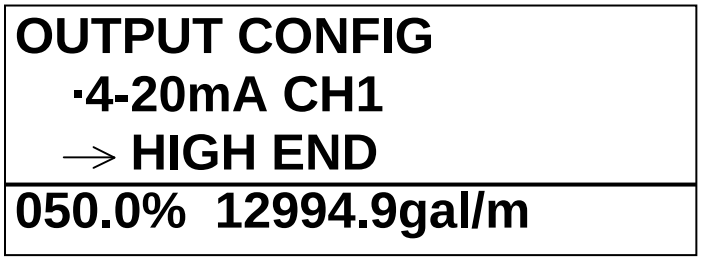

Figure 59 High End Output Configuration Example Screen

Copyright © 2006 CiDRA Corporation

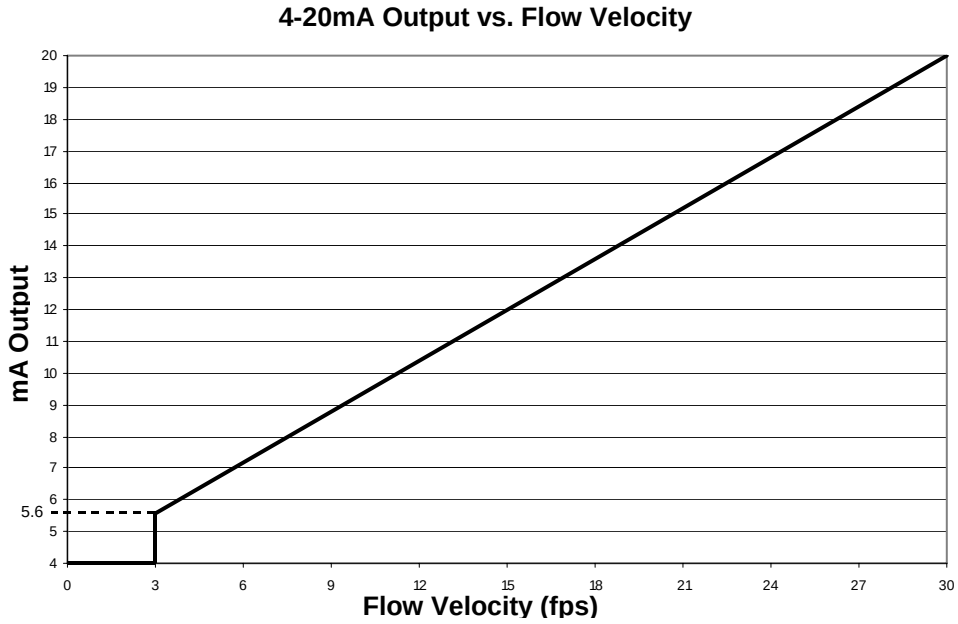

Figure 60 4-20mA Output Set to 0 – 30 fps

Note: For a 4-20mA setting of 0-100%, the system Low Flow Cut Off of 3.0 fps, from the 4–20 mA output will be 5.6mA. At flows less than 3.0 fps, greater than 30.0 fps, or if the meter is not working, the display will read as configured in the setup of the '**Out of Range**' (i.e. 'Hold' (at last value), <4mA, 4mA or >20mA) and the '**Overrange Rail**' parameters.

The '**Out of Range**' menu selection permits the user to specify the 4-20mA output behavior when the meter cannot measure the current value. The settings allow a less than 4mA output ('**<4mA**'), a greater than 20mA output ('**>20mA**'), a constant 4mA output ('**4mA**'), and a hold last valid reading output ('**Hold**').

The '**Overrange Rail**' selection is used to select the output behavior when the measurement goes below or above the '**Low End**' or '**High End**' settings made earlier, but is still below or above the maximum measurement value. Default is '**Enable**', where the 4-20mA output will go to minimum or full scale. If this option is '**Disabled**', the meter will output as previously set up in '**Out of Range**' when the meter goes below or above the measurement range.

Copyright © 2006 CiDRA Corporation

'**4mA and 20mA Trim**' – allows user to adjust the transmitter 4-20mA outputs to match the plant standard or loop control. The following message screen will appear when this menu item is selected.

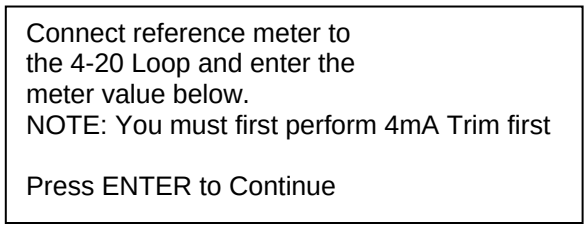

Figure 61 4-20mA Trim Message box

Press 'ENTER' to clear the warning and 'ENTER' to input the current value measured on the reference meter. Press 'ENTER' to complete the input and repeat for the 20mA menu selection. These measurements will calculate and apply an offset and slope (can be viewed on the 'INFO>CONFIGURATION>4-20mA Channel 1 (or 2)' screen) for the selected channel.

- **Pulse**

The SONARtrac Pulse Output utilizes a solid-state relay closure to output a pulse train. The solid-state relay is rated for +30VDC to –10VDC, 100mA maximum. An external user supplied power source (pull-up) is connected to the (+) and (-) terminals under the word "Pulse" on the terminal board. The Pulse Output can be configured to output a pulse frequency or a number of pulses for one of the following measurements:

- Speed of Sound (SOS): Outputs a frequency corresponding to SOS.

- Gas Volume Fraction (GVF): Outputs a frequency corresponding to GVF.

- Flow Rate (VF): Outputs a frequency corresponding to flow rate.

- Flow Rate %: Outputs a frequency corresponding to % of VF full-scale range.

- Total Flow (Totalizer): Outputs a series of pulses corresponding to the total number of flow units counted over the previous update interval.

Menu options for configuring the output include a multiplier, a pulse width, and a low cut setting (see descriptions below).

'**Multiplier**' - A factor used to scale the pulse output where:

scaled pulse quantity = (pulse output parameter) / multiplier value

'**Pulse Width**' - Sets the width of the Pulse output in seconds (0.5ms, 1ms, 20ms, 33ms, 50ms, 100ms).

Copyright © 2006 CiDRA Corporation

'**Low Cutoff**' - Setting at which the Pulse output will turn off.

Care must be taken to configure the multiplier and pulse width to allow the full range of the pulse output to be:

1. Measurable by the user's equipment. There may be a limitation on the minimum pulse width the user's equipment can detect.

2. Less than the maximum pulses per second allowed by the transmitter.

The maximum number of pulses per second that can be output is based on the selected **Pulse Width** (see table below):

Max Pulses = 500/Pulse Width

Pulse Width	Pulse Per Second Maximum
0.5 ms	1000
1.0 ms	500
20 ms	25
33 ms	15.15
50 ms	10
100 ms	5

Table 15 Maximum Pulse Per Second Based On Pulse Width

'**Output Sel**' - Used to select the measurement to be output.

The **Info>Configuration>Pulse Output** selection on the transmitter menu displays the currently configured max/min pulse range, and will indicate an over range condition if one exists (i.e. settings exceed maximum pulses per second capability).

Warning: Settings Produce > Max PPS!

Copyright © 2006 CiDRA Corporation

'**Flow Rate**', '**Flow Rate %**', '**SOS**', and '**GVF**' generate a different pulse output than '**Total Flow**' ('**Totalizer**'). Flow Rate, Flow Rate %, SOS, and GVF will output a pulse frequency based on the current measurement. The **pulse width** will vary in order to maintain a 50% duty cycle pulse train.

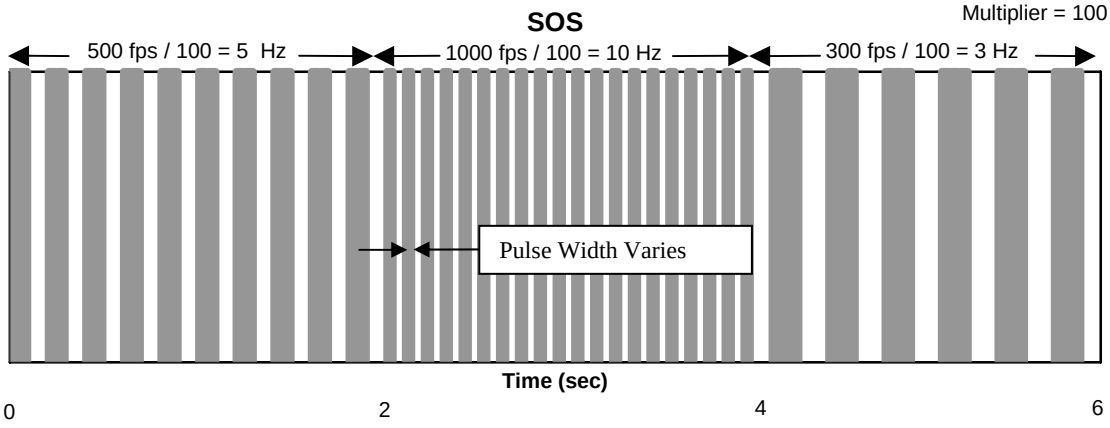

Figure 62 Speed Of Sound and Gas Volume Fraction Pulse Output

'**Total Flow**' (or Totalizer) will output a number of pulses based upon the total gallons (or flow units) counted during the previous update interval (i.e. the display update time is defaulted to 2 seconds). In effect, the Total Flow measurement is a pulse counter, updated at the same time as the display.

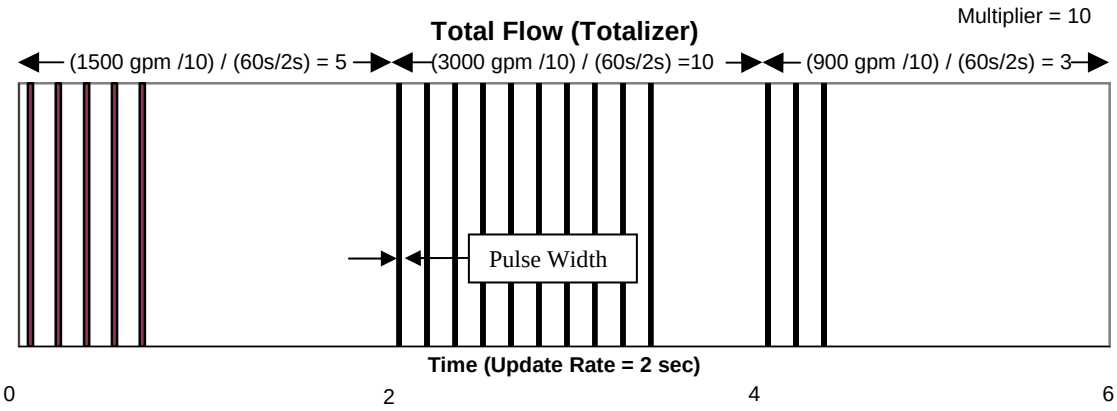

Figure 63 Total Flow Pulse Output

Copyright © 2006 CiDRA Corporation

The following is an example of Pulse settings applied to Flow Rate:

Output: Flow Rate
(Default setting, based on 8" schedule 40 pipe)

Min Flow: 513.575 gal/m
Max Flow: 5135.751 gal/m

Pulse Output: Flow Rate
Multiplier: 100
Pulse Width: 1 ms
Low cutoff: 0% or 513.5 gal/m (no cutoff)

Min Pulses: 5.136 Pulses per second
Max Pulses: 51.357 Pulses per second

In the above example, the Pulse output frequency indicates the flow rate in gallons per minute, divided by 100. The output will therefore vary between 5.136 and 51.357 PPS (Hz), based on the Flow Rate reading.

The following is an example of Pulse settings applied to Total Flow:

Output: Total Flow
Flow Rate: 400 gal/min
Pulse Output: Totalizer
Multiplier: 10
Pulse Width: 1 ms
Low cutoff: 0% or 270.1 gal/m (no cutoff)

In the above example, Pulse output would be 400 gpm / 10 = 40 pulses per minute.

The following is an example of Pulse settings applied to Gas Volume Fraction:

Pulse Output: GVF
Multiplier: 1
Pulse Width: 1 ms
Low cutoff: 0.000%

Min Pulses: 0 Pulses per second
Max Pulses: 100 Pulses per second

In the above example, the Pulse output frequency will vary between 0 and 100PPS (Hz), based on the actual GVF reading.

- **Alarm**

The transmitter alarm is a tri-state output. The Alarm modes are '**Off**' (no alarm conditions present) indicated by the transmitter mounted LED off and no signal being sent to the DCS, '**Warning**' (an alarm condition has entered a range of condition(s) where the integrity of readings may be suspect) indicated by the transmitter mounted LED and alarm output relay blinking, and '**Critical**' (an alarm condition in which the output of the meter can no longer be considered valid) indicated by the alarm LED on the transmitter being constantly on and constant relay closure output to the DCS. The measurement result

Copyright © 2006 CiDRA Corporation

should be discarded and closed loop controls switched to manual during a critical alarm.

The alarm can be cancelled either manually or will clear automatically when the alarm condition is no longer present depending on the menu option selected (see below).

The following table lists the alarm parameters with their default values.

Alarm Parameter	Condition	User Entry	Warning Default Value	Critical Default Value
Band Temperature	TMP>	Y	> 80 °C	> 90 °C
	TMP<	Y	< 0 °C	< 0 °C
RMS Sound Pressure Level	SPL>	Y	> 200 dB	> 200 dB
	SPL<	Y	< 50 dB	< 80 dB
Volumetric Flow Quality	VFQ<	Y	< 0.3	< 0.2
Speed Of Sound Quality	SSQ<	Y	< 0.03	< 0.01
Event log updated	LOG	N		
Sensor overload	OVL	N		
Volumetric Flow or True Liquid Flow	FLW>	Y	> 30 ft/s	> 30 ft/s
	FLW<	Y	< 3.2 ft/s	< 3 ft/s
Gas Volume Fraction	GVF>	Y	> 100 %	> 100%
	GVF<	Y	< 0%	< 0%
Sensor Failure	FAIL	N		

Table 16 Alarm Triggers

Note: The alarm trigger for Flow (VF or TLF) and Gas Volume Fraction (GVF) can be set from the transmitter menu. All other values must be set using SONARtrac Basic (or higher level) user program.

Up to three alarm triggers can be selected. For example, an alarm output may be programmed like this:

Warning = TMP I LOG I VF
(Warning = Band Temperature or Event Log Updated or VF)

Critical = FAIL I OVL & LOG
(Critical = Sensor Fail or Sensor Overload and Event Log Updated

The menu inputs for setting '**Alarm**' are described in the following paragraphs.

'**Alarm Control**' menu is used to activate the '**Warning**' and '**Critical**' alarm functions. Once turned '**On**' it is used to select the parameters the alarm will activate on (refer to Table 16).

The '**Manual Clear**' function under '**Alarm Control**' has options of '**Disable**' and '**Enable**'. In the '**Disable**' mode the alarm will automatically clear when the alarm condition no longer exists. In the '**Enable**' mode, the alarm must be reset manually by opening the front door of the transmitter and pressing the '**Exit**' button. **Note:** For transmitters installed in Class I Division 2 area follow established safety procedures prior to opening transmitter door.

Copyright © 2006 CiDRA Corporation

	WARNING ***For Class I, Division 2 applications, follow established safety procedures prior to opening transmitter door.***

The '**Alarm Warn Threshold**' and '**Alarm Crit Threshold**' menu selections are used to set the flow rate and gas volume fraction alarm set points. All other parameters must be set using the Configure menu options in SONARtrac Basic Program.

- ***SONARtrac*™ Filters**

The *SONARtrac*™ transmitter has 3 modes of signal output filtering. These are '**Damping**' '**Noise Reduction**', and '**Spike Filtering**'. They are applied in that order. The filtering affects both the display on the transmitter and the signal to the current, pulse, alarm and digital outputs.

'**GVF Damping Filter**' is used to reduce the noise of a signal through the use of a first order lag filter with a fixed time constant. The time constant of the filter is set by the user.

- State: Used to '**Enable**' or '**Disable**' this option.

- Time Constant: User input range of values that can be applied are 0 – 600 seconds with 3 seconds as the factory default.

Care must be taken when choosing the time constant for the damping filter as the response time for the reported measurement will increase as the magnitude of the time constant is increased.

If the time response of the reported measurement is critical then the '**GVF Noise Filter**' should be used instead of the damping filter.

'**GVF Noise Filter**' is a filter that has been designed to provide both steady state noise attenuation and quick transient response. Under steady state conditions the filter will use a long time constant in order to attenuate noise on the signal. Once the measurement begins to ramp up or down, the filter will reduce the filter time constant to allow the meter output to track the changes with a faster response time.

- State: Used to '**Enable**' or '**Disable**' this option. Factory default is 'Disable'.

- Magnitude: Choices of '**Low**' or '**High**'. The high setting differs from the low setting with more damping in both the transient and steady state condition.

'**VF / GVF Spike Filter**' provides spike suppression capability for normal operation as well as for the 'no flow' condition.

While in the 'no flow' condition, this filter requires a user programmable number of consecutive good readings to be calculated prior to enabling the display and all outputs of the transmitter. This is

Copyright © 2006 CiDRA Corporation

particularly useful in applications where spurious signals are detected by the meter and are then reported on the display and the transmitter outputs.

Once the meter is running and displaying values, this filter will provide two other forms of spike suppression. The first is for spurious dropouts due to poor quality readings. The filter will hold the last good value until a user programmable number of consecutive bad readings have been accumulated. This user programmable number is the same number as described above for the 'no flow' condition. When the number of consecutive bad readings is exceeded, the output will blank (-----) and the 4-20mA output will be set to the 'Out Of Range' state. The second is for spurious in-range calculations of good quality. These will manifest themselves as a positive or negative spike of a magnitude much greater than the steady state deviations. This filter will monitor the rate of change of the calculated value for a number of consecutive readings. If a single reading exceeds the desired rate of change, the transmitter will hold the last value. The rate of change limit is a user programmable value entered in units of percent of total transmitter flow rate or gas volume fraction. If the rate of change is exceeded for three consecutive readings, the filter will be reset and the calculated value will be displayed.

- State: Used to '**Enable**' or '**Disable**' the Spike Filter.

- Length: Defines the number of consecutive measured points that must be within the reading-to-reading variation range defined by the '**Percent**' or '**Delta**' parameter in the filter setup.

- Delta or **Percent**: Defines the reading-to-reading variation limit. This is in units of percent of transmitter operating range.

Therefore, Reading-to-Reading Variation (RV) is the device Maximum Measurable Value (MaxMV) in ft/sec minus the device Minimum Measurable Value (MinMV) in ft/sec times the percent of the Measurable Range '**Percent**' ('**Delta**') (MR) input by the user to be used for the filter; or:

$$RV = [(MaxMV – MinMV) * MR]$$

For example, in a device with an SOS MaxMV of 5000 fps and SOS MinMV of 50 fps and a %MR of 10%, reading variations greater than 495 fps will be rejected.

$$RV = [(5000 – 50) * 0.10] = 495 \text{ fps}$$

Therefore, measured points that have measurement variations greater than 495 fps will not be displayed or outputted until the number of consecutive readings that do not vary by more than RV is greater than that set by '**Length**'.

Copyright © 2006 CiDRA Corporation

10.1.3 Input Config

The Input Config menu is used when optional external sensors (for example a pressure or temperature transducer) are powered by and input to the transmitter. The transmitter does not have the capability to display or transmit these sensor values. **Note:** When these sensor inputs are used the '**Temperature Sel**' and '**Pressure Sel**' menu options under the '**Basic Config**' menu must be used to designate which sensor input is used for a particular measurement.

- **Sensor 1 & 2**

'**Units**' allows for setting the sensor units to '**None**' (not used) '**F**' (temperature degrees F), '**C**' (temperature degrees C), '**Barg**' (pressure in Bars gauge), '**kPag**' (pressure in kilo Pascals gauge), '**PSIg**' (pressure in pounds per square inch gauge). Note: If an "absolute" scaled pressure transducer is used select '**None**' for units.

'**Scale**' allows for setting the range of the input in units of measure ('**Units**') per mA.

'**Offset**' allows for inputting an offset in mA due to a non-zero milliamp sensor output range. The offset is calculated by the equation y=mx+b where: y is a value within the transducer range, m is the transducer range divided by the milliamp output range, x is the milliamp output at the 'y' value, and b is the offset.

For example, a 0-100 psig pressure transducer with a 4-20 mA output will have a –25 offset.

y=mx+b
100 psi = (100psi / 16mA) x (20mA) +b
100 psi – 125 psi = b
-25 psi = b = '**Offset**'

10.1.4 Customize Menu

The Customize menu is used to configure the transmitter to meet user needs for local display of flow parameters.

- **Display**

The display parameters are used to customize the displayed units and appearance of the display.

'**Line 1**' and '**Line 2**' adjustments set the outputs of those lines to '**Totalizer**', '**Flow Rate %**', '**Flow Rate**', '**GVF**', '**SOS**', and '**Blank**'.

'**Contrast**' is used to adjust the screen appearance due to lighting conditions. Normally this is set to 170.

- **Sensor Setup**

'**State**' is used to turn individual sensors '**On**' or '**Off**'. Normal operating condition is with all sensors set to '**On**'.

Copyright © 2006 CiDRA Corporation

- **Flow Units**

The menu selectable '**Units**' are '**gal**' (gallons), '**l**' (liters), '**m^3**' (cubic meters), '**user**' (user defined), '**iga**' (imperial gallons), '**ft^3**' (cubic feet), '**ft**' (feet), '**m**' (meter).

The menu selectable units for '**Time**' are '**s**' (second), '**m**' (minute), '**h**' (hour), '**d**' (day), '**user**' (user defined).

In both the '**Volume**' and '**Time**' selections custom user labels can be input by the user by selecting '**user**' from the menu. The user defined labels are then input using the '**User Volume / Time**', '**Base**', and '**Scale Factors**'.

- **SOS Units**

The menu selectable SOS Units are '**ft**' (feet) and '**m**' (meter). The units of time measure are fixed to be in seconds. Hence, the output of SOS is in units of '**ft/s**' or '**m/s**'.

- **Flow Cutoff Range**

The flow cutoff range '**Low End**' and '**High End**' are used to set the low end and high end, respectively, of flow rates that will be displayed on the transmitter. Flow under or over the set points will be displayed as '**<Min Flow**', '**>Max Flow**', as appropriate.

- **Totalizer**

Selections under this menu are used to configure the totalizer functions.

'**Units**' submenu is used to select the units of the display. Currently these are '**gal**' (gallons), '**m^3**' (cubic meters), '**VF Vol Units**' (volumetric flow display units), '**l**' (liters) '**ft^3**' (cubic feet).

'**Lowcut Enable**' turns the lowcut function on or off.

'**Lowcut**' sets the flow values that will no longer be used for totalization.

'**Multiplier**' selects the multiplier applied to the displayed totalized units. Selections of 'M' (x 1,000,000), 'k' (x 1,000), '1' (x 1) are available. **Note:** This selection does not affect the pulse output when '**Totalizer**' is selected. Set the pulse output multiplier in the '**Pulse**' setup menu.

'**Reset**' sets the totalizer display to zero.

- **Wr Protect Mode**

When this is '**Enabled**' no other parameters can be changed. The user must '**Disable**' this option before making any menu changes. Default is '**Disable**'.

Copyright © 2006 CiDRA Corporation

10.1.5 Communications Menu

- **Ethernet**

Option is used to view and set the IP address and Subnet Mask of the transmitter.

- **Serial Options**

Used for setting up the ‘Baud Rate’ and the serial communications to ‘RS232’ or ‘RS485’.

- **HART**

Settings are used for configuring the protocol when using HART. Default is for single device addressing.

- **Reset Comms**

Used to re-initialize the communications ports without loosing data history (as would happed by re-initializing the transmitter). This can be used to restart acquiring data if, for example, the ethernet cable was removed from the ethernet port while the StBasic program was still running.

10.1.6 Diagnostics Menu

- **Sensor Check**

Selecting ‘**Diagnostics>Sensor Check**’ on the transmitter menu will perform tests on all ‘ON’ sensors. (Individual sensors may be turned off in the ‘Customize>Sensor Setup>State’ menu.) The test will take several seconds to perform. After the test is completed, the screen will display results.

The following are examples of test results.

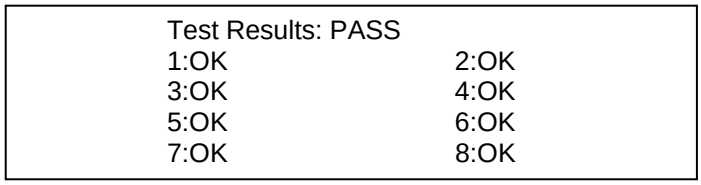

Figure 64 Test Passes Display Example

In the above figure the results indicate all sensors pass the test.

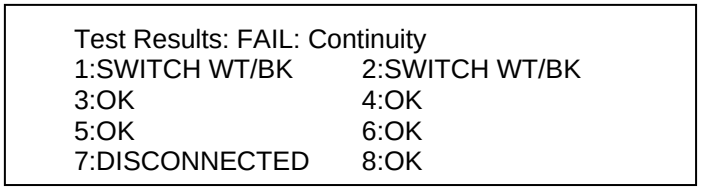

Figure 65 Test Failed

Copyright © 2006 CiDRA Corporation

In previous figure the sensor band failed the test. Sensor 1 and 2 are either mis-wired between their terminals or reversed (wht to blk). Sensor 7 is disconnected (open circuit).

If an error is noted when the sensor test is first run, repeat the test to confirm the fault.

If the error occurs at first power up, verify wiring termination at the transmitter terminal block. If a 'disconnect' error is seen after a system has been in service, verify the sensor to transmitter cable is not damaged or that a wire in the transmitter has not loosened from its terminal block.

- **4–20 Test**–

Allows the user to send out discrete milliamp signals from 4-20mA Output #1 and #2 to the control system. Settable in one milliamp increments.

- **Gain**

The sensor pre-amplifier is located within the sensor cover. The electronic 'Gain' (amplification) applied to the sensor outputs can be accessed through the transmitter 'Diagnostics' menu. Transmitter based gain control functions are provided through three sub-menus – '**AUTOSET GAIN**', '**CHECK/SET GAIN**', and '**TEST GAIN**'. Gain adjustments should be made to the system when the process is operating "normally".

'**AUTOSET GAIN**' performs an automatic test and adjustment of the pre-amplifier gain setting. It automatically cycles through the pre-determined gain settings in order to find the optimal gain setting based on the flow conditions at that time. AUTOSET GAIN should be run while the process is operating at normal conditions to avoid making an incorrect gain setting.

'**CHECK/SET GAIN**' enables the user to check the current gain setting in the pre-amplifier and to manually set it to one of four user settings 1, 4.65, 21.55, and 98.65.

'**TEST GAIN**' performs a test of the system electronics to determine if the gain setting is optimal.

- **Self Test**

'PASS/FAIL' test performed on the system RAM and DPRAM (internal memory).

- **Keyboard Test**

Tests the function of each of the keyboard keys. The alarm LED will light for each key pressed to indicate the test is in progress.

Copyright © 2006 CiDRA Corporation

- **Clear History**

Will delete transmitter stored Data History and re-start saving of transmitter data.

- **Param Edit**

This is a diagnostic feature rarely used and should only be used under the direction of CiDRA personnel. Contact CiDRA Technical Support.

- **Monitor**

Displays a set of various '**System**' or '**Sensor**' parameters, updated at the display update rate, Used by Factory Technical Support personnel.

10.1.7 Info Menu

The '**Info**' menu allows the user to get detailed information on the flow monitoring system. The ↑ and ↓ keys scroll through the pages in the Info menu.

- **Revisions**

Provides a multi-page list of installed system revisions, hardware / software serial / model numbers and part numbers.

- **Diagnostics**

Provides a multi-page list of system, temperatures, voltages, and status messages.

- **Configuration**

Provides a multi page list (summary) of system setup parameters.

- **Event Log**–

Displays a list of events, stored in non-volatile memory, with a time-offset indicating the time since power-up that the event occurred. Pressing the up and down arrow keys will page up and down through all events. Pressing the '→' arrow will display a prompt to erase the 'Event Log'. Press '→' arrow again to erase. To cancel the erase function, press any key other than 'ENT'.

Copyright © 2006 CiDRA Corporation

The following figure lists the potential error codes shown in the log. The codes can be used by service personnel to help identify a problem with the transmitter.

Error Code	Error Code
"Error Code"	"DSP 11"
"DSP 1"	"DSP 12"
"DSP 2"	"Sensor Over"
"DSP 3"	"SER 14"
"DSP Failed"	"SER 15”
"DSP 5"	"SER 16"
"DSP 6"	"SER 17"
"PreAmp Fail"	"SER 18"
"DSP 8"	"DSP 19"
"DSP 9"	"SER 20"
"DSP 10"	"SER 21"

Figure 66 Error Codes Listed in Event Log

- **Sensor Min/Max**–

Lists the current sensor minimum and maximum measurements as well as the peak sensor values since the last peak history reset. A ‘!’ at the start of a line indicates that the sensor is currently overloaded. This may indicate the sensor is not working properly or that the pre-amplifier gain is too high and should be reduced. Pressing the ‘ENTER’ key will refresh the display. Pressing the ‘→’ arrow key will display a prompt to erase the sensor peak history. Press ‘→’ arrow again to erase.

```
 1:    0/    1    Peaks:    -39/1507
 2:   -1/    1    Peaks:    -19/1120
 3:   -1/    1    Peaks:    -54/1358
! 4:   -1/   32768 Peaks:    -60/32768  ← Overload
 5:    0/    1    Peaks:    -53/1121
 6:   -1/    2    Peaks:    -50/1667
 7:    0/    2    Peaks:    -35/1667
 8:   -1/    1    Peaks:    -53/1263
```

Figure 67 Sensor Max/Min Display

10.2 Resetting Processor

If it is necessary to reset the processor (system hangs up) press the switch on the upper left edge of the connector block board. This is equivalent to cycling power.

10.3 Resetting to Factory Defaults

Note: It is recommended that factory defaults be reset only by factory qualified service personnel. All factors (Basic Config, Output Config, etc.) must be re-entered following a Reset to Factory Defaults.

To '**Reset to Factory Defaults**', **press** and **hold** the '**EXIT**' key while pressing the reset switch on the upper left edge of the connector block board.

Alternatively, switch transmitter **Power OFF** and **press** and **hold** the '**EXIT**' key while turning **Power On**. Hold the '**EXIT**' key until the screen prompt is shown. If you decide you do not want to reset factory defaults, either cycle power or press any key other than '**ENTER**'.

Copyright © 2006 CiDRA Corporation

11 TRANSMITTER STARTUP & OPERATION

11.1 Initial Start-up

At initial power up the Green LED will light and the transmitter will display startup progress; loading firmware into the system, loading system parameters, and the heartbeat indicator as it begins to collect data from the sensor head. Once startup is complete, the display will clear and begin displaying measurements. The following figure illustrates an initial system startup screen.

Figure 68 System Start Display

If internal configuration parameters are changed in the menu screens, once the menu is exited, the display will clear and show the 'Startup >>>>' display. This indicates that the system is restarting with the new parameters and is beginning to make measurements. Once the startup procedure is complete, the measurements will be displayed.

11.1.1 Initial Setup

In order to conduct measurements, the '**Basic Config'** setup must be completed. If power goes off, this setup will remain in memory and does not have to be re-entered.

- Press any key on the keypad to enter the '**Menu Mode**'.
- When '**Basic Config**' menu is displayed on Line 1 of the display press the '**ENTER**' key to enter the options available under that menu.
- '→**Sensor Serial #**' will appear on Line 2 of the display. Press the '**ENTER**' key and the current sensor serial number entered in the transmitter will be displayed on Line 4 of the display. The user can then use the arrow keys (↑ and ↓ to scroll through the values and

Copyright © 2006 CiDRA Corporation

← and → to change position) to enter the sensor serial number. Once all digits are entered, press the '**ENTER**' key to save to memory. '→**Sensor Serial #**' will again be displayed on Line 2.

- Next, press the ↓ key to scroll to the '**Pipe Size**' menu on Line 2. Press the '**ENTER**' key to access the options available under that menu. Note: it is necessary to access only one of the following options.
- The first choice on the '**Pipe Size**' menu is '→**ID / Wall**' shown on Line 3 of the display. If this value is known it can be entered here. Press the '**ENTER**' key and the current saved inner diameter and wall thickness will be displayed on Line 4 of the display. Use the arrow keys (↑ and ↓ to scroll through the values and ← and → to change character) to enter the pipe inner diameter. Units can be inches or millimeters. Once all digits are entered, press the '**ENTER**' key to save the value to memory.
- The second choice on the '**Pipe Size**' menu is '**Size/Sched**' (pipe Size / Schedule). If this value is known press the '**ENTER**' key. Use the arrow keys to enter the values and then press the '**ENTER**' key to save to memory.
- The third choice on the '**Pipe Size**' menu is '**OD / Wall**' displayed on Line 3. Use the arrow keys (↑ and ↓ to scroll through the values and ← and → to change character) to enter the pipe inner diameter. Units can be inches or millimeters. Once all digits are entered, press the '**ENTER**' key to save the value to memory.
- Following the entering of 'Pipe Size' press the '**BACK**' key and '→**Pipe Size**' will be displayed on Line 2. At this point the user can either press the '**ENTER**' key to re-enter the '**Pipe Size**' menu or press the ↓ key to move to the next menu item.
- Pressing the ↓ key will next display '→**Pipe Material**' on Line 2. Press the '**ENTER**' key and the pipe modulus for Steel, PVC, or Stainless Steel (SS) pipe or 'Custom' will be displayed. Use the ↑ and ↓ arrow keys to scroll through the list of values. Press '**ENTER**' to select the material that corresponds to the pipe material. Selecting Steel, PVC, or SS will enter the modulus for the selected pipe material. Selecting 'Custom' allows the user to enter the modulus of other pipe materials using the arrow keys (↑ and ↓ to scroll through the values and ← and → to change character). Press the '**ENTER**' key to set the new value.
- If no change is made (or after a change in Pipe Material has been made) pressing the ↓ key will next display '→**Fluid Properties**' on Line 2. Press the '**ENTER**' key and '→**Specific Gravity**' will appear on Line 3 and the current value on Line 4. To change the Line 4 value press '**ENTER**' and use the arrow keys to enter the new value. Water at 25 ºC (0.997) is the default. Appendix E lists

Copyright © 2006 CiDRA Corporation

values for water at various temperatures. Once the new value has been entered on Line 4, press '**ENTER**'.

- If no change is made (or after a change in Specific Gravity has been made) pressing the ↓ key will next display '→**SOS**' on Line 3 and the current value on Line 4. To change the Line 4 value press '**ENTER**' and use the arrow keys to enter the new value. Water at 25 ºC (4910.4 ft/s) is the default. Appendix E lists values for water at various temperatures. Once the new value has been entered on Line 4, press '**ENTER**'.
- If no change is made (or after a change in Specific Gravity has been made) pressing the ↓ key will next display '→**VISCOSITY (Pa s)**' on Line 3 and the current value on Line 4. To change the Line 4 value press '**ENTER**' and use the arrow keys to enter the new value. Water at 25 ºC (8.9008 e^{-04}) is the default. Appendix E lists values for water at various temperatures. Once the new value has been entered on Line 4, press '**ENTER**'.
- Once the Fluid Properties have been entered press the '**BACK**' key and↓ key and '→**Pressure**' will be displayed on Line 2 and the current assumed process pressure set value on Line 4. Note: the units are PSIg. To change the Line 4 value press '**ENTER**' and use the arrow keys to enter the new value. This will result in a fixed pressure being used for GVF calculations. If a Pressure Transducer will be used to input process pressure into the transmitter, it is not necessary to enter a pressure.
- Pressing the ↓ key will next display '→**Temperature**' on Line 2 and the current assumed process temperature set value on Line 4. Note: the units are user selectable to degrees C or F. To change the Line 4 value press '**ENTER**' and use the arrow keys to enter the new value. This will result in a fixed temperature being used for GVF calculations. If a Temperature Transducer will be used to input process temperature into the transmitter, it is not necessary to enter a pressure.
- Pressing the ↓ key will next display '→**Pressure Sel**' on Line 2. If an external pressure sensor will not be used to input pressure to the transmitter **'Fixed**' appears on line 4 and use the ↓ key to scroll to the next menu item. However, if an external pressure sensor will be used to input pressure to the transmitter press '**ENTER**' and use the ↓ key to select either '**Sensor #1**' or '**Sensor #2**'. ('Sensor #1' or 'Sensor #2' refers to the sensor input the temperature transducer is wired to on the terminal block within the transmitter box.) Once the selection is made, press '**ENTER**'.
- Pressing the ↓ key will next display '→**Temperature Sel**' on Line 2. If an external temperature sensor will not be used to input temperature to the transmitter **'Fixed**' appears on line 4 and use the ↓ key to scroll to the next menu item. However, if an external

Copyright © 2006 CiDRA Corporation

temperature sensor will be used to input pressure to the transmitter press '**ENTER**' and use the ↓ key to select either '**Sensor #1**' or '**Sensor #2**'. ('Sensor #1' or 'Sensor #2' refers to the sensor input the temperature transducer is wired to on the terminal block within the transmitter box.) Once the selection is made, press '**ENTER**'.

- Pressing the ↓ key will next display '→**Altitude**' on Line 2 and the selected value above (or below) sea level on Line 4. To change the Line 4 value press '**ENTER**' and use the arrow keys to enter the new value. Note: if an external pressure transducer that reads pressure in 'absolute' values (e.g. PSIa, BARa, or KPaa is used an altitude correction is not necessary.
- Pressing the ↓ key will next display '→**Calibration**' on Line 2. Press the '**ENTER**' key and '→**C0**' will appear on Line 3 and a numerical value on Line 4. Press the '**ENTER**' key and use the **arrow keys** to enter the calibration factors that will accompany the sensor. Once the 'C0' value is entered press the '**ENTER**' key to store that value to memory. Line 3 will show '→**C0**'; press the ↓ key to move to '→**C1**', press '**ENTER**', and use the **arrow keys** to enter 'C1' values. Once the values are entered, press '**ENTER**' and press the ↓ key to move to '→**C2**' and enter those values and press '**ENTER**' and the '**BACK**' key.
- The display will show '→**Calibration**' on Line 2. Press the ↓ key to scroll to **'**→**Flow Direction**' on Line 2. If it is necessary to change the flow direction (if the sensor was installed with the Flow Direction arrow on the band opposite the actual flow direction within the pipe or the process flow has changed direction) press the '**ENTER**' key and toggle the ↑ or ↓ to change flow direction. Once changed press the '**ENTER**' key.
- The display will show '→**Flow Direction**' on Line 2. Press the ↓ key to scroll to '→**Op Mode**' on Line 2. Press the '**ENTER**' key and the current operational mode will be displayed on Line 4 of the display. Press the ↓ key to and scroll to '**Flow/GVF/SOS**' and then press the '**ENTER**' key to set that selection.
- Press the ↓ key to scroll to '→**Set Date/Time**' on Line 2. Press the '**ENTER**' key and the current saved date and time will be displayed on Line 4 of the display. Use the arrow keys (↑ and ↓ to scroll through the values and ← and → to change character) to enter the date and time. If possible, synchronize the date and time entered to that of the process control data system. **Note:** Time is in 24-hour format. Once the date and time have been set press the '**ENTER**' key followed by the '**BACK**' key.
- At this point '**Basic Config**' is displayed on Line 1 of the display. The user can re-enter this menu if desired by pressing the '**ENTER**' key or by pressing the ↑ or ↓ arrows to move to other Level 1 menus (see Table 12).

Copyright © 2006 CiDRA Corporation

Entry of inputs to the other Level 1 menus is by the same process as used in ‘Basic Config’.

The following table provides a template for recording the transmitter setup for future reference.

Copyright © 2006 CiDRA Corporation

Transmitter Serial Number: _____		
Basic Config		**As Left**
Sensor S/N		
Pipe Size	ID / Wall	
	Size/Sched	
	OD / Wall	
Pipe Material		
Fluid Properties	Specific Bravity	
	SOS (ft/sec)	
	Viscosity (Pa s)	
Pressure		
Temperature		
Pressure Sel		
Temperature Sel		
Altitude		
Calibration	C0	
	C1	
	C2	
Flow Direction		
Op Mode		
Set Date / Time		
Output Config		**As Left**
4-20mA Ch1	Output Sel	
	Power Sel	
	Low End	
	High End	
	Out of Range	
	Overrange Rail	
	4mA Trim	
	20mA Trim	

Software Revision: _____		
Output Config (continued)		**As Left**
4-20mA Ch2	Output Sel	
	Power Sel	
	Low End	
	High End	
	Out of Range	
	Overrange Rail	
	4mA Trim	
	20mA Trim	
Pulse	Multiplier	
	Width (ms)	
	Lowcut	
	Output Sel	
Alarm Control	Warning	
	Critical	
	Manual Clear	
Alarm Warn Thresh	FLW Min / Max	
	GVF Min / Max	
Alarm Crit Thresh	FLW Min / Max	
	GVF Min / Max	
Flow Damping	State	
	Time Constant	
Flow Noise Filt	State	
	Magnitude	
Flow Spike Filt	State	
	Length	
	Percent	
GVF Damping	State	
	Time Constant	
GVF Noise Filt	State	
	Magnitude	
GVF Spike Filt	State	
	Length	
	Delta	

Copyright © 2006 CiDRA Corporation

Input Config		As Left
Sensor #1	Units	
	Scale	
	Offset	
Sensor #2	Units	
	Scale	
	Offset	
Customize		**As Left**
Display	Line 1	
	Line 2	
	Contrast	
Sensor Setup	State	
Flow Units	Volume	
	Time	
	User Vol Label	
	User Vol Base	
	User Vol Scale	
	User Time Label	
	User Time Base	
	User Time Scale	
SOS Units	Units	
Flow Cutoff	Low End	
	High End	
Totalizer	Units	
	Lowcut Enable	
	Lowcut	
	Multiplier	
	Reset	
	Input	
Wr Protect Mode		

Communications		As Left
Ethernet	IP Address	
	Subnet Mask	
Serial Options	Baud Rate	
	Config	
HART	Preambles	
	Resp Preambles	
	Univ Cmd Rev	
	Polling Address	
	Find Dev Arm	

Table 17 Transmitter Setup

Copyright © 2006 CiDRA Corporation

12 TRANSMITTER USB PORT

The USB port allows the user to interface with the transmitter without the use of a computer. Information is stored on a USB memory stick (a *SONAR*stick™) and then transferred to a computer for storage or transfer. **Note**: The USB port cannot be used for communications between the transmitter and a computer; it is for use only with a memory stick.

An interruption in data output from the transmitter to a data control system will occur when using some of the functions of the USB port and memory stick. It is recommend that the process control room be alerted when using the USB data port.

CAUTION

Loss of transmitter output signal may occur when using USB port. Contact process control room and advise them the transmitter may be off line during memory stick operations.

The following table shows the menu structure that becomes available when using a memory stick inserted in the USB port. Detailed information for each menu item follows. Navigation through the menus is accomplished with the transmitter front panel keys.

Copyright © 2006 CiDRA Corporation

Level 1	Level 2	Level 3	Range	Description
Snapshot				Automatically creates a file of 5 minutes Raw Data; 1 day of Data History; System Info, current Configuration, Event Log
Load Configuration				Automatically loads a Configuration File from the memory stick
Advanced Functions	System Config	File for Save	Alpha numeric entry	Allows for naming and saving the current Configuration File
		Save Config		Saves the named file
		Load Config	Alpha numeric named files	Allows for retrieving and loading a Configuration File
	Save Raw Data	Duration	1, 5, 10, 30, 60, 120, 240 minutes	Selects the time duration of saving a Raw Data file
		Save		Starts and saves Raw Data File
	Save Data History	Decimation	None, 2, 5, 10, 50, 100, 500, 1000	Determines the frequency of data points to be saved
		Length	Everything, 1, 2, 5, 10, 30, 50, 100, 250, 500 days	Amount of days worth of data to be saved (limited to size of data file in transmitter)
		Enter: Save Text		Saves Data History as a text file
	Manage Files	Delete File	Scroll through list of files	Deletes specific files
		Erase All	All files on memory stick	Deletes ALL files on data stick
	Set Date/Time			Sets date and time

Table 18 USB Port Menu

Copyright © 2006 CiDRA Corporation

12.1 USB Port File Naming Convention

Files collected from the transmitter using the USB Port are automatically named to readily identify them. They are named in accordance with the following naming convention:

ssss_nnnnnnnnYYMMDDhhmmss.ext

The following table details the naming convention:

Characters	Description
ssss	transmitter serial number, maximum of 4 characters
nnnnnnnn	name string, optional
YY	year
MM	month
DD	day
hh	hour
mm	minute
ss	second
ext	file extension (.txt, .ini, .bin)

Table 19 USB Port File Naming Convention

Examples of files named in accordance with this file naming convention are given in the following table.

File Name	Description
208_DataHistory050614110247.txt	Data History text file from Transmitter Serial Number 208 acquired on Year: 2005, Month: June, Day: 14, Hour 11, Minute 02, Second: 47
208_050614110312	Raw data binary file from Transmitter Serial Number 208 acquired on Year: 2005, Month: June, Day: 14, Hour: 11, Minute: 08, Second: 12
208_SysInfo050614110812.txt	System Information text file from Transmitter Serial Number 208 acquired on Year: 2005, Month: June, Day: 14, Hour: 11, Minute: 08, Second: 12
208_Config050614110812.ini	Configuration encrypted binary file from Transmitter Serial Number 208 acquired on Year: 2005, Month: June, Day: 14, Hour: 11, Minute: 08, Second: 12
208_EventLog050614110813.txt	Event Log text file from Transmitter Serial Number 208 acquired on Year: 2005, Month: June, Day: 14 Hour: 11, Minute: 08, Second: 13

Table 20 USB Port File Name Examples

Copyright © 2006 CiDRA Corporation

12.2 Save Snapshot

Save Snapshot is a one step download of a pre-determined data set from the transmitter. The data set is comprised of the following. (Download of Snapshot takes about 6 – 7 minutes.)

- **Raw Data**

Raw Data is as the name implies, a set of unprocessed data from the sensor head.

A raw data file (5 minutes duration) is downloaded during Snapshot.

- **Data History**

Data History is a compilation of flow system information that is saved within the transmitter. The data history file is a text file that contains the data output from the transmitter as well as some system information that can be used for diagnostic purposes. The duration (number of days) of data stored in data history is primarily determined by the system data update rate. Under default setup (2 second update rate) approximately 24 days of data will be stored.

A data history file of the last 24 hours is downloaded during Snapshot.

- **System Info**

System Info (information) is a list of system hardware and software revisions and versions, system diagnostic information, and system setup information.

- **Configuration**

Configuration is a full list of the transmitter setup parameters. The file is encrypted for security purposes.

- **Event Log**

Event Log lists a history of the abnormal operations within the system that may affect its performance. Up to 23 events are stored in this file; after that the oldest event will be overwritten with a new event.

12.3 Load Configuration

Load Configuration is one-step command used to upload a configuration file to the transmitter from the *SONAR*stick™.

In the Load Configuration mode the transmitter will only load files with the serial number of the transmitter followed by '_LoadConfig.ini' in the file name. For example, a configuration file for transmitter serial number 234 must be named '234_LoadConfig.ini' for it to be uploaded by this utility.

Copyright © 2006 CiDRA Corporation

12.4 Advanced Functions

Advanced Functions provides the user with a menu of options for saving data to and uploading data from the *SONAR*stick™. It also allows for updating system firmware and managing files on the *SONAR*stick™, and setting the date and time in the transmitter. These options are discussed below.

- **System Config**

System Config function allows naming, saving and loading configuration files. (In Snapshot mode a configuration file is automatically saved.)

-'**Naming' and 'Saving**' allows the user to specify the name for a configuration file and then save the file. The file will be automatically named per the naming convention discussed earlier in this section (example, 234_Config050614121633.ini) or the user can edit the name of a file to be saved.

-'**Loading**' allows the user to load a configuration file from a list of '.ini' files. Note that files do not have to be 'transmitter serial number specific', as they must be in Load Configuration.

- **Save Raw Data**

Save Raw Data function allows the user to define the amount of Raw Data to be downloaded. (In Snapshot mode a 5-minute Raw Data file is automatically created.) User selectable options of 1, 5, 10, 30, and 60, 120 and 240 minutes are available. The files are automatically named per the naming convention discussed earlier in this section.

- **Save Data History**

Save Data History function allows the user the option of selecting the amount of transmitter Data History to be downloaded. (In the Snapshot mode only the last 24 hours of Data History is saved.)

-'**Decimation**' allows the user to determine the frequency of data points to be downloaded. For example, the user can decide to download all data (decimation None), every other reading (decimation 2), every 5th reading (decimation 5) or every 10th, 50th, 100th, 500th, or 1000th reading (decimation 10, 50, 100, 500, or 1000 respectively). In most cases none is selected.

-'**Length**' allows for selecting the time duration to be downloaded. Choices of everything, 1 day, 2, 5, 10, 30, 50, 100, 250, 500 days are selectable.

-'**Enter: Save Txt**' creates a text file of the data. The files are automatically named per the naming convention discussed earlier in this section.

Copyright © 2006 CiDRA Corporation

These files are often opened using a spreadsheet program and analyzed using that tool.

- **Manage Files**

Manage Files function allows the user to manage the files that reside on the *SONAR*stick™. The 'Delete File' option allows for deleting single files from the *SONAR*stick™ and 'Delete All' removes all files.

- **Set Date/Time**

Set Time/Date allows the user to change the time and date that is stored in the transmitter. The format of the date and time code is MM/DD/YY hh:mm:ss.

Copyright © 2006 CiDRA Corporation

13 SENSOR REMOVAL PROCEDURE

If removal of the sensor is required, the following procedure should be followed.

1. Specific details regarding the removal of the SONARtrac sensor should be discussed with a CiDRA representative prior to removal.
2. Obtain Hot Work Permit if required.
3. Turn off electrical power to the system. Follow lock-out / tag-out procedures as required.
4. Open the transmitter door using a screwdriver and remove the sensor band shorting plug (stored in the transmitter) if there is one.
5. Unlatch and disconnect the sensor to transmitter cable connector from the sensor cover. Close cable connector cover on sensor head cover.
6. Protect cable connector from dirt, water, etc. (example, wrap it in a protective plastic bag).
7. Remove the rain seal(s) or boot gasket fenders (stainless steel covers) from the sensor head (if equipped).
8. Open the sensor cable access panel located on the cover by loosening the six screws (they should not be fully removed from the cover as they are captive screws).
9. Under the access panel removed above, disconnect the sensor band to cover electrical connector by unlatching the connector locks and sliding the connector back as shown below.

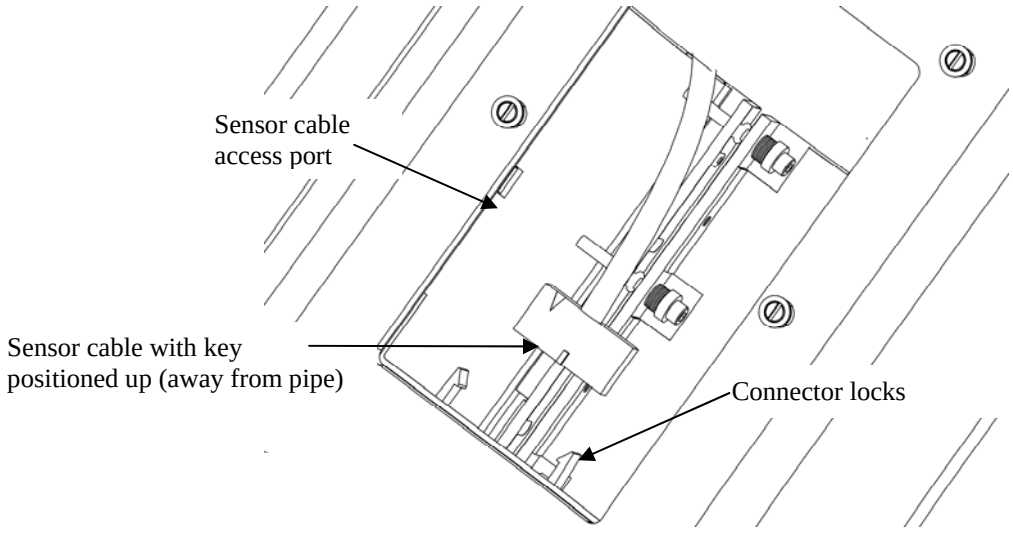

Figure 69 Sensor Cable Connector Removal

Copyright © 2006 CiDRA Corporation

10. Install a sensor band shorting plug on the sensor band cable. Note: Sensor bands with an “R” in the Part Number suffix (e.g. Part #: 20686-26-R) do not require a shorting plug.

WARNING

Potential electrical discharge. Always install a sensor band shorting plug (see item 10 above) on the sensor band connector whenever the sensor band connector is not installed in a mating connector.

11. Install spring clamps on both sides of the cover flanges to keep it from sliding or separating while removing the cover bolts.
12. Remove the boot gasket band if removing a stainless steel cover.
13. Remove the sensor cover bolts, nuts, and washers, and then cover from pipe.Replace sensor cable access cover.
15. Use a hex driver or Allen wrench to unscrew the nine sensor screws that hold the two rails of the sensor together. Unscrew each screw a couple of turns until they are loosened. While the screw threads are still engaged in the attachment rails a few turns, spread the sensor rails apart and then continue to loosen the screws until they are no longer engaged in the threads. (By doing this, the o-ring that keeps the screws from coming out of the rails will stay in place.) Use care to keep the fastener assembly intact. If the spacers or Bellville washers do come off the screw refer to the sensor band screw figure in the Sensor Installation section of the manual for proper stack-up of components.
16. Remove the sensor band assembly from the pipe.
17. Slide the screw and washer assembly o-ring down the screw to retain the screws in their holes.
18. The original packaging as described in Section 6.1 should be used when storing/transporting the system. If not available, lay the sensor band in the bottom of the cover and move it to an area where it will not be damaged.
19. Replace sensor band screws prior to re-installation of sensor band.
20. Inspect and replace fiberglass cover gaskets as required.
21. Inspect and replace stainless steel cover flange gaskets as required.

Copyright © 2006 CiDRA Corporation

Appendix A *SONARtrac*™ VF & GVF-100 SPECIFICATIONS

A1 Physical Specifications

A1.1 Power Supply

AC Voltage Version: 100 to 240 Volts AC, 50/60 Hz, 25 watts

DC Voltage Version: 18-36 Volts DC, 25 watts

A1.2 Fuse Protection

AC Voltage Version: The transmitter input power is fuse protected by two 1 amp, 250 volt, 5mm x 20mm fuses.

DC Voltage Version: The transmitter input power is fuse protected by two 3.15 amp, 250 volt, 5mm x 20mm fuses.

A1.3 Operating Temperature Range

Transmitter	-4°F to +140°F (-20°C to +60°C)
Sensor Head Process Temperature	-40°F to +212°F (-40°C to +100°C)
Sensor Head Ambient Temperature	-40°F to +140°F (-40°C to +60°C)

A1.4 Storage Temperature Range

Transmitter	-22°F to +176°F (-30°C to +80°C)
Sensor Head	-40°F to +185°F (-40°C to +85°C)

A1.5 Construction Materials

- **Sensor Head**

Fiberglass enclosure with PTFE gasket material for sizes 2 to 16 inch

Stainless steel enclosure with silicone end seals for sizes 18 inch and above

- **Transmitter**

Fiberglass enclosure with NEMA 4X rating.

Urethane gasket material.

Acrylic viewing window.

Copyright © 2006 CiDRA Corporation

- **Sensor to Transmitter Cable**

The standard sensor to transmitter cable consists of 12 twisted pairs of 20 AWG conductors with an overall shield encased in a PVC jacket. The standard cable has an operating range of -4ºF – +221ºF (–20ºC to +105ºC). The cable is UL Listed (UL Standard 13, Type PLTC) and CSA Certified (CSA C22.2 No. 214, PCC FT4). The outer diameter of the cable is 0.61 inch (15.5 mm) nominal.

Optional low temperature and armored cables are also available. Please contact your local distributor or CiDRA Corp. for more information.

The *SONARtrac*™ flow meter is configured such that the transmitter is always located remotely from the sensor head. The cable connecting the sensor head to the transmitter can be up to 300 feet long.

- **Electrical Connections**

Holes sized for 3/4 inch NPT connection (1-1/16 inch diameter) are located on the base of the transmitter enclosure. The sensor to transmitter cable is terminated to the screw terminal block within transmitter enclosure.

A single cable connection is made between the transmitter and the sensor head. Sensor head connection is made with a NEMA 4x rated connector. Connectorized cable provided.

Note: All connector glands used on the transmitter box should be rated to NEMA 4X to maintain transmitter rating of NEMA 4X.

A1.6 Transmitter Dimensional Envelope

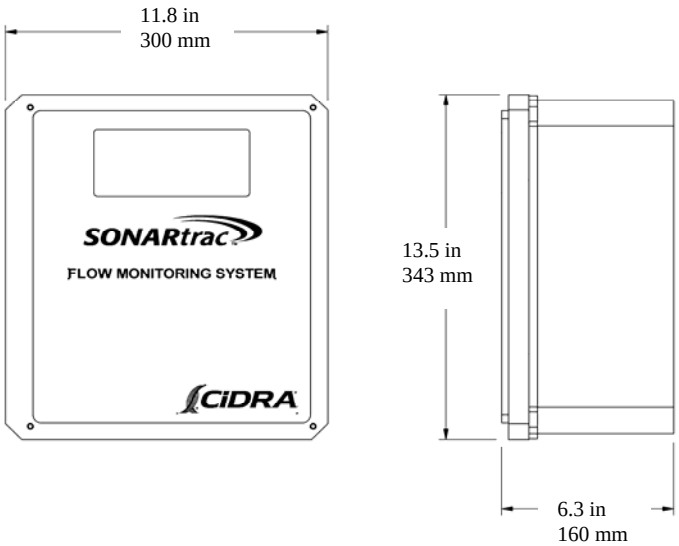

A1.7 Fiberglass Sensor Head Cover Envelope

The dimensions of the 2” to 16” fiberglass sensor head are given on the following figure and table.

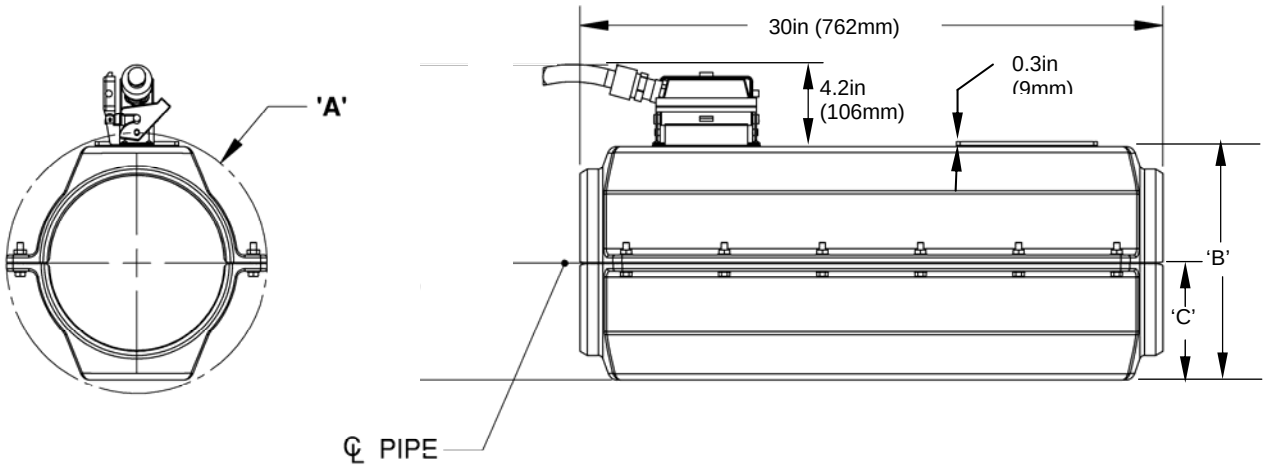

Fiberglass Sensor Head Envelope										
Model No	**Pipe / Tube Nominal Size**		**Outside Dia**		**Dim ‘A’**		**Dim ‘B’**		**Dim ‘C’**	
	inch	**mm**	**inch**	**mm**	**inch**	**mm**	**inch**	**mm**	**inch**	**mm**
SH-E02-01-01	2	50	2.4	60	9.3	236	5.8	147	2.9	74
SH-T02-01-01	2	50	2.0	51	9.3	236	5.8	147	2.9	74
SH-D02-01-01	2.5	65	2.5	64	9.3	236	5.8	147	2.9	74
SH-E03-01-01	3	80	3.5	89	9.3	236	7.0	178	3.5	89
SH-T03-01-01	3	80	3.0	76	9.3	236	7.0	178	3.5	89
SH-E04-01-01	4	100	4.5	114	9.8	249	7.7	196	3.9	98
SH-T04-01-01	4	100	4.0	102	9.8	249	7.7	196	3.9	98
SH-T05-01-01	5	125	5.0	127	11.4	290	10.0	254	5.0	127
SH-E06-01-01	6	150	6.6	168	11.4	290	10.0	254	5.0	127
SH-T06-01-01	6	150	6.0	152	11.4	290	10.0	254	5.0	127
SH-E08-01-01	8	200	8.6	219	13.4	340	12.0	305	6.0	152
SH-E10-01-01	10	250	10.8	273	15.5	394	14.1	358	7.1	179
SH-B10-01-01	10	250	10.0	254	15.5	394	14.1	358	7.1	179
SH-E12-01-01	12	300	12.8	324	17.4	442	16.1	409	8.1	204
SH-E14-01-01	14	350	14.0	356	18.8	478	17.4	442	8.7	221
SH-E16-01-01	16	400	16.0	406	20.8	528	19.4	493	9.7	246

Copyright © 2006 CiDRA Corporation

A1.8 Stainless Steel Sensor Head Cover Envelope

The dimensions of the 18” to 36” stainless steel sensor head monitors are given on the following figure and table.

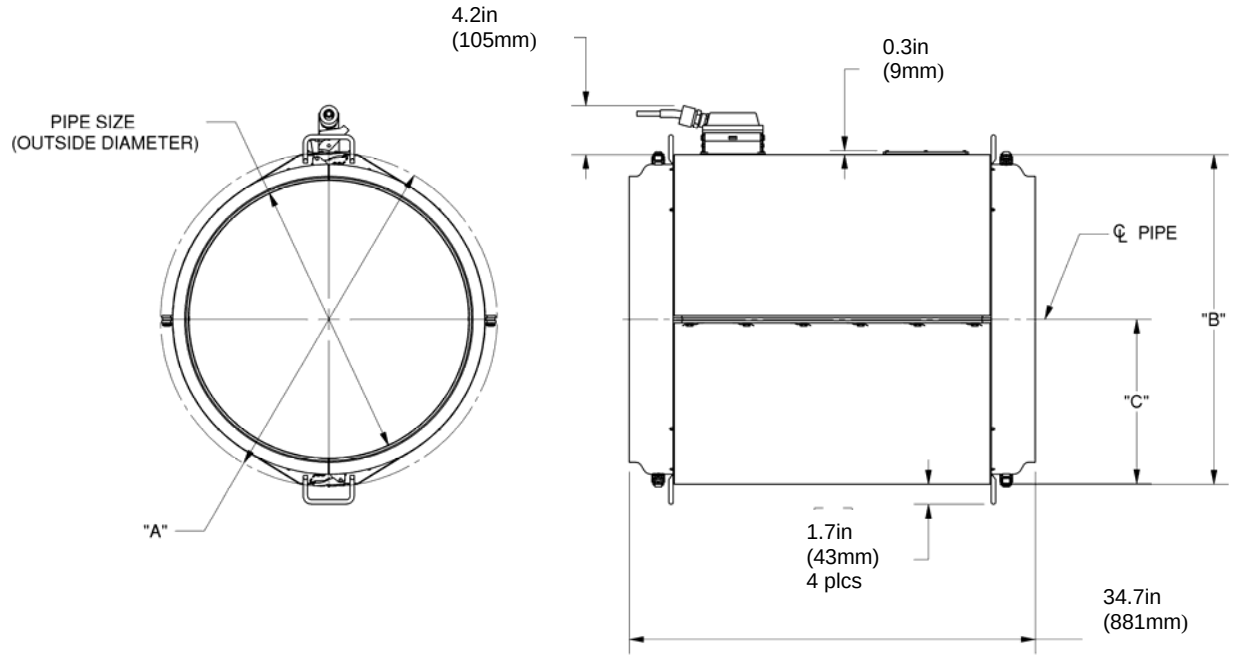

Stainless Steel Sensor Head Envelope										
Model No	**Pipe / Tube Nominal Size**		**Outside Dia**		**Dim ‘A’**		**Dim ‘B’**		**Dim ‘C’**	
	inch	**mm**	**inch**	**mm**	**inch**	**mm**	**inch**	**mm**	**inch**	**mm**
SH-E18-02-02	18	450	18.0	457	22.9	581	22.4	568	11.2	284
SH-E20-02-02	20	500	20.0	508	24.8	631	24.4	619	12.1	310
SH-E24-02-02	24	600	24.0	610	28.8	731	28.4	721	14.2	361
SH-E26-02-02	26	650	26.0	660	30.8	781	30.4	772	15.2	386
SH-E28-02-02	28	700	28.0	711	32.7	831	32.4	822	16.2	411
SH-E30-02-02	30	750	30.0	762	34.7	881	34.4	873	17.2	437
SH-E36-02-02	36	900	36.0	914	40.8	1035	40.5	1028	20.2	514

Copyright © 2006 CiDRA Corporation

A1.9 Sensor Band Compatibility

The sensor band assemblies are interchangeable with all sensor head cover assemblies of the same pipe diameters. Meter calibration factors are included for each sensor band assembly. All sensor head assemblies, independent of pipe size, are compatible with all transmitters.

A1.10 Humidity Limits

Transmitter: 0 – 100%

A1.11 Analog Output Adjustment

Two separate 4-20mA output signals scalable over stated range of meter. Primary 4-20mA output HART compatible.

A1.12 Auxiliary Output Function

Serial Communication (RS-232/485), Pulse Relay, Alarm Relay

A1.13 Analog Output Test

Yes (under Diagnostic Menu)

A1.14 Software Lockout

Yes (under Customize Menu)

A1.15 Hazardous Area Classification

Systems rated for use in Class I, Division 2, Groups A, B, C, and D use will be specifically labeled for use in those environments. Installation must be in accordance with Control Drawing 20332-01 as shown in Appendix C of this manual. Updated information can be found on the CiDRA web site at www.cidra.com.

Copyright © 2006 CiDRA Corporation

A2 VF & GVF-100 PERFORMANCE SPECIFICATIONS

A2.1 Turn-on Time

30 minutes to rated accuracy from power up

25 seconds from power interruption

A2.2 Start-up Time

25 seconds from zero flow

A2.3 Low / High Flow Cutoff

Adjustable between 3 and 30 ft/sec. At process flow rates below and above these values, the output will register a '<min flow' or'>max flow' indication.

A2.4 Flow Rate Range

SONARtrac™ is capable of measuring signals from process fluids traveling at velocities between 3 ft/s and 30 ft/s (1.0 m/s to 10 m/s). This capability is for both forward or reverse flow directions.

A2.5 Flow Rate Accuracy

Flow rate accuracy is +/-1.0% of flow rate from 3 to 30 ft/sec (1 to 10m/s).

A2.6 Gas Volume Fraction Range

SONARtrac™ is capable of determining the Gas Volume Fraction in fluids between 0% and 20% entrained air.

A2.7 Gas Volume Fraction Accuracy

Accuracy of +/- 5% of reading within the 0.01% to 20% entrained gas/air range when used with an in-line process pressure reading.

A2.8 Repeatability

+/- 1% of reading

A2.9 Update Rate

2 seconds

Copyright © 2006 CiDRA Corporation

Appendix B *SONARtrac*™ EC DECLARATION OF CONFORMITY

EC Declaration of Conformity

The undersigned, representing the following Supplier:

CiDRA Corporation
50 Barnes Park North
Wallingford, CT 06492 USA

Herewith declare that the Products:	**SONARtrac**
Product identification (brand and catalog number/part number):	**TB8-xx-xx, CA-x-xxxx, SH-xxx-xx-xx, TB8-xx-xx-xx-xx, SH-xxx-xx-xx-xxx-xx** ***(where x represents any alphanumeric combination)***

are in conformity with the provisions of the following EC Directive(s) when installed in accordance with the installation instructions contained in the product documentation:

73/23/EEC	Low Voltage Directive (LVD) as amended by 93/68/EEC
89/336/EEC	Electromagnetic Compatibility (EMC) Directive as amended by 91/263/EEC, 92/31/EEC, and 93/68/EEC. Product is categorized as Group 1, Class A.

and that the standards and/or technical specifications referenced below have been applied:

EN 61010-1:2001	Safety Requirements for Electrical Equipment for Measurement, Control, and Laboratory Use
EN 55011:1998 + A1:1999 + A2:2002	Industrial, Scientific, and Medical (ISM) Radio Frequency Equipment – Radio Disturbance Characteristics — Limits and Methods of Measurement
EN 61326-1:1997 + A1:1998 + A2:2001	Electrical Equipment for Measurement, Control, and Laboratory Use – EMC Requirements

Year of CE Marking 2003

Signature

Name: **Kevin Didden**
Position **CEO**
Company **CiDRA Corporation**
Date: **05/18/05**

CiDRA Document Number	Rev	PCO #	Date	Page #
20634-01	02	P05-0037	5/18/05	1 of 1

Copyright © 2006 CiDRA Corporation

Appendix C SYSTEM CONTROL DRAWING *SONARtrac*™, NON-INCENDIVE

The system control drawing for installation in Class I Division 2, Groups A, B, C, and D is found on the following page.

Copyright © 2006 CiDRA Corporation

REVISIONS			
REV	DESCRIPTION	DRWN	CHKD
01	PRELIMINARY RELEASE - APPROVAL PENDING	JMD 01/23/04	J. DIENER 01/23/04
02	ADDED: TRANSMITTER TERMINAL BLK WIRING BLOCK DIAGRAM.	JMD 02/02/04	J. DIENER 02/02/04
03	ADDED: CLARIFICATION FOR CABLE AND SHIELD IDENTIFIERS. INITIAL RELEASE P03-0185	JMD 02/05/04	J. DIENER 02/05/04
05	REVISION 04 WAS INCORPORATED INTO REV 05. REV 04 WAS NEVER RELEASED. REVISED: NOTE 1 & 2 NEC ARTICLE NO. 501.10 WAS 501.4 ADDED: MODEL NO. TB8-XX-XX-XX-02. P05-0027	JMD 05/09/05	J. DIENER 05/09/05

Hazardous (Classified) Location
Class 1, Division 2, Groups A-D

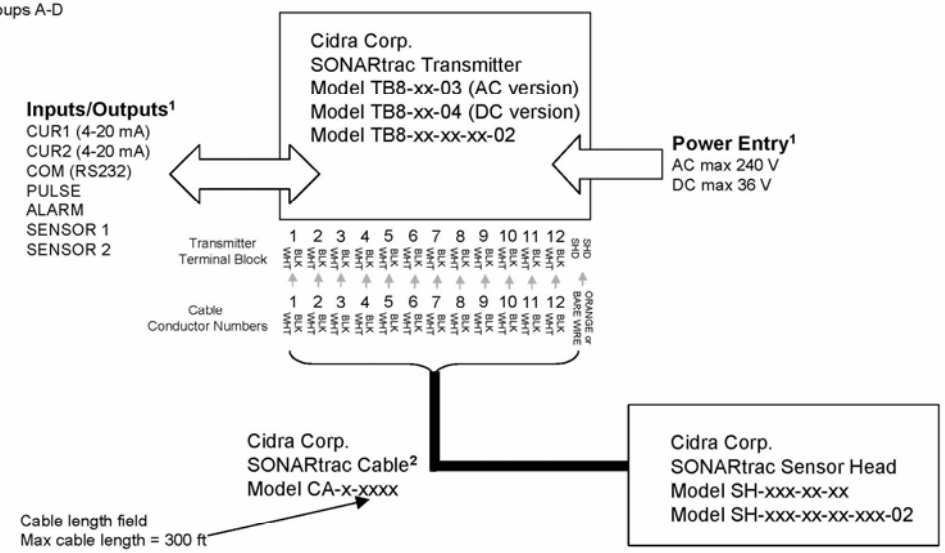

Transmitter Terminal block wiring

Terminal Block	1		2		3		4		5		6		7		8		9		10		11		12			
	WHT	BLK	WHT	BLK	WHT	BLK	WHT	BLK	WHT	BLK	WHT	BLK	WHT	BLK	WHT	BLK	WHT	BLK	WHT	BLK	WHT	BLK	WHT	BLK	SHD	SHD
Cable	Sensor #1		Sensor #2		Sensor #3		Sensor #4		Sensor #5		Sensor #6		Sensor #7		Sensor #8		SPARE		485							
	HI	LOW	HI	LOW	HI	LOW	HI	LOW	HI	LOW	HI	LOW	HI	LOW	HI	LOW			HI	LOW	-12 V	GND	+12 V	GND	GND	GND

[1] Power Entry and Inputs/Outputs must be installed in accordance with Article 501.10(B)(1) of the National Electrical Code ANSI/NFPA 70
[2] Sensor Head Cable must be installed in accordance with Article 501.10(B)(3) of the National Electrical Code ANSI/NFPA 70

UNCONTROLLED COPY
VERIFY UP TO DATE REVISION IN ORACLE

NOTES: U.O.S.

MATERIAL:	HEAT TREAT:	FINISH:
NA	NA	NA

CiDRA ENGINEERING CAD FILE NUMBER: 20332-01.SLDDRW

UNLESS OTHERWISE SPECIFIED
PART MUST BE FREE OF BURRS AND/OR FLASH
BREAK SHARP EDGES .002-.008
FILLET RADII .005 MAX
DIMENSIONS ARE IN INCHES & APPLY AFTER FINISH
SURFACE FINISH 63 MAX

THE CONTENT OF THIS DOCUMENT IS PROPRIETARY TO CIDRA. IT MAY NOT BE DISCLOSED TO OTHERS, IN WHOLE OR IN PART FOR ANY PURPOSE OTHER THAN AS EXPRESSLY WRITTEN BY CIDRA.
© CiDRA CORP 2004
UNPUBLISHED WORK

APPROVALS		
	BY	DATE
DRAWN	JMD	01/23/04
CHECKED	J. DIENER	01/23/04
ENGRG	M. DAVIS	01/23/04
MFG	X	X

TOLERANCES
.XXX ±.005 FRAC ±1/64
.XX ±.01 ANGLES ±2°
INTERPRET DWG PER ASME Y14.5M-1994
DIMS IN PARENTHESIS ( ) ARE REF ONLY
DO NOT SCALE DWG

CiDRA 50 BARNES PARK NORTH WALLINGFORD CT, USA 06492

SYSTEM CONTROL DRAWING, SONAR TRAC, NON-INCENDIVE

B	DWG NO 20332-01	REV 05
	SCALE: 1:1	SHEET 1 OF 1

Copyright © 2006 CiDRA Corporation

Appendix D MATERIAL SAFETY DATA SHEETS

P/N 52307-01 PTFE Pipe Sealant

MATERIAL SAFETY DATA SHEET

IDENTITY: FORMULA-8
(Oxygen Compatible)

Chemical name: Aqueous Paste & Filler of PTFE
Chemical family: Perfluorocarbon Polymer
Formula: $(CF)\ 2^n$

MANUFACTURER: Fluoramics Inc.
ADDRESS: 18 Industrial Avenue
Mahwah, N.J. 07430
PHONE: 201-825-8110
DATE PREPARED: January, 2003
PREPARED BY: F.G. Reick, President

CAS NUMBERS:
H_2O (water): No CAS number
Carboxy Vinyl Polymer: 9003 01 4
Polytetrafluoroethylene Powder: 9002 84 0
Polytetrafluoroethylene Aqueous Dispersion: 9002 84 0
TI 02 Titaniumdioxide: 13463 67 7
Monoethanolamine: 141 43 5

SECTION 1 - COMPONENTS

COMPONENTS	%	ACHIH - TLV
Carbopol	5	
Pigments	20	$Ti0^2$
Vehicle	14	Water
Surfactants - Triton 100	1	
Teflon (PTFE) T30**	59	
Colloidal Silica	1	
**Inert to oxygen, non-combustible, odorless, no known dangerous mixtures		

SECTION 2 - PHYSICAL/CHEMICAL CHARACTERISTICS

Boiling point: 212° (water)
Vapor Pressure: less than 0.01
Vapor Density: N/A
Solubility in Water: Dispersible

Specific Gravity H_2O=1): 1.2
Melting Point: N/A
Evaporation Rate (butyl acetate=1): H_2O slow
Water Dispersable
Appearance and Odor: White paste - odorless

Copyright © 2006 CiDRA Corporation

SECTION 3 - FIRE & EXPLOSION HAZARD DATA

Flash Point & Method Used: None
Flammability Limits in Air % by Volume: Non-combustible
Extinguisher Media: Incombustible
Special Fire Fighting Procedures: None
Unusual fire and Explosion Hazards: In extreme fire situation, protection from hydrogen fluoride fumes should be employed

	NFPA CODES	HMIS CODES
HEALTH	1	1
FLAMMABILITY	0	0
REACTIVITY	0	0
PERSONAL PROTECTION	SCBA	B

SECTION 4 - REACTIVITY HAZARD DATA

Stability: Stable
Conditions to Avoid: Temperature above 250º without adequate ventilation. Will not polymerize.
Incompatability (Materials to Avoid): Strong alkali
Hazardous Decomposition Products: At 650ºC (1202º), COF_2 is the principal toxic product. At above 650ºC, major products are CF_4 and CO_2.
Hazardous Polymerization: Will not occur

SECTION 5 - HEALTH HAZARD DATA

Primary Routes of Entry: Inhalation - Skin - Ingestion
Health Hazards: Treat symptomatically
Signs and Symptoms of Exposure: PTFE polymer, when thermally decomposed, may cause polymer fume fever and flu-like symptoms.
Medical Conditions Generally Aggravated by Exposure: See below
Eye Contact: Wash with copious amounts of water.
Skin Contact: Remove by wiping and wash with soap and water
Inhalation: Remove to fresh air
Ingestion: contact a physician
Emergency First Aid Procedures: Call a physician.

Copyright © 2006 CiDRA Corporation

SECTION 6 - CONTROL AND PROTECTIVE MEASURES

Respiratory Protection (Specify Type): If exposed to high temperature processing fumes, wear self-contained breathing apparatus.
Protective Gloves: Yes
Eye Protection: Goggles if contact is probable
Ventilation to be Used: Local exhaust preferred; General (mechanical), usually none
Other Protective Clothing and Equipment: Protective garment when applicable
Hygienic Work Practices: As indicated

SECTION 7
PRECAUTIONS FOR SAFE HANDLING AND USE
LEAK PROCEDURES

Steps to be Taken if Material is Spilled or Released: N/A
Waste Disposal Methods: Land fill is preferred but disposal methods must conform with local state and federal regulations.
Precautions to be Taken in Handling and Storage: Strictly enforce NO SMOKING rule for workers handling material.
Other Precautions and/or Special Hazards: Use normal personal hygiene and good housekeeping.

©Copyright 2003 - Fluoramics Inc. All rights reserved.

HYLOMAR
when performance really counts™

MATERIAL SAFETY DATA SHEET

1. Product :
Hylomar Advanced Formulation, Hylomar Advanced Formulation HV
Hylomar Advanced Formulation (Black), Hylomar Advanced Formulation VHV, Hylomar EMS

2. Composition / Information on Hazardous Ingredients

Material	%	CAS No.
Polyester Polyol / Polyurethane Mixture	90	
Silica	10	7631-86-9

3. Hazards Identification
Non Hazardous according to the CHIP 2 Regulations 1994.

4.0 First Aid

Effects of Over Exposure By:

4.1 Eye Contact
May cause irritation and lacrimation

4.2 Skin Contact
No hazardous effects are known

4.3 Inhalation
Not applicable

4.4 Ingestion
No hazardous effects are known

Treatment of Over Exposure By:

4.5 Eye Contact
Irrigate immediately with water for 10 minutes. If irritation exists seek medical advice

4.6 Skin Contact
Wash thoroughly with soap and water.

4.7 Inhalation
Not applicable

4.8 Ingestion
In case of large quantities give milk or water to drink. Do not induce vomiting. If casualty feels unwell seek medical attention.

5.0 Fire-Fighting Measures

5.1 Suitable Extinguishing Media
Foam, waterspray, CO_2 or dry chemical

5.2 Unsuitable Extinguishing Media

5.3 Exposure Hazards
Can produce irritant fumes as combustion products. Fumes may include hydrogen cyanide.

5.4 Protective Equipment for Fire-Fighters
Self contained respiratory protective equipment

6.0 Accidental Release Measures

6.1 Personal Precautions
Spillage's may cause slip hazard

6.2 Environmental Precautions
Keep away from water courses/sewers

6.3 Clean-Up and Neutralisation Methods
Scrape up material and place in a container suitable for disposal

7.0 Handling and Storage

7.1 Precautions for Safe Handling
Observe good general hygiene as with any industrial chemical

7.2 Storage Precautions
Store between 5°C and 35°C

7.3 Other Information

8.0 Exposure Controls / Personal Protection

8.1 Technical Protective Measures
Wear impervious PVC or rubber gloves if in long term contact with the product.

8.2 Exposure Control Limits
N/A

8.3 Respiratory Protection
Not required under normal conditions of use.

8.4 Hand Protection
Rubber/PVC Gloves are recommended

8.5 Skin Protection
Overalls are recommended.

8.6 Eye / Face Protection
Wear safety goggles to protect against splashes

Copyright © 2006 CiDRA Corporation

9.0	**Physical and Chemical Properties**	9.10	**Oxidising Properties** N/A
9.1	**Physical State** Paste	9.11	**Vapour Pressure** N/A
9.2	**Colour** Blue or Black	9.12	**Vapour Density** N/A
9.3	**Odour** Virtually Odourless	9.13	**Relative density / Specific Gravity** 1.18
9.4	**pH Value** Not soluble in water	9.14	**Solubility** N/A
9.5	**Boiling Point / Range** Not Determined	9.15	**Solubility in Water** None
9.6	**Flammability** Product will support combustion	9.16	**Solubility in Fats and Oils** Not Determined
9.7	**Flash-point** >392°C	9.17	**Partition Coefficient (n-Octanol / Water)** Not Determined
9.8	**Auto-ignition Temperature** Not Determined	9.18	**Viscosity** Medium – Heavy paste. According to grade.
9.9	**Explosive Limits** N/A	9.19	**Other Information**

10.0	**Stability and Reactivity** Stable under normal conditions of use.	10.2	**Materials to Avoid** Strong Oxidising Agents, Strong Alkalis
10.1	**Conditions to Avoid** No special precautions.	10.3	**Hazardous Decomposition Products** Cyanide compounds on combustion.
11.0	**Toxicological Information** - No data is available.		
12.0	**Ecological Information**		
13.0	**Disposal Considerations** Dispose of at an approved site in accordance with Local legislation		
14.0	**Transport Information** Non Hazardous	14.2	**Packaging Group:**
14.1	**UN Number:**	14.3	**Shipping Name**

ROAD & RAIL	SEA	AIR
Hazard Symbols :	**Hazard Symbols :**	**Hazard Symbols :**
ADR/RID Class :	**IMDGCODE :**	ICAO/IATA Class :
Hazard No :	**EMS No. :**	
Other :	**MFAG No :**	

15.0	**Regulatory Information**	15.3	**Safety Phrases** S37 - Wear suitable gloves
15.1	**Classification** Non Hazardous	15.4	**Specific EC Controls**
15.2	**Risk Phrases** None required	15.5	**Relevant UK Legislative Controls**

16.0	**Other Information** Raw materials used for advanced formulation have been verified as being listed under the TSCA listings in the USA.	16.3	**Further Information**
		16.4	**Sources of Key Data** Suppliers' safety data sheets; CHIP 2 Regulations 1994.
16.1	**Training Advice**		
16.2	**Recommended Uses and Restrictions** Product is a gasketing, and sealing compound		

Every effort has been made to ensure that the information in this Safety Data Sheet is accurate and reliable but the company cannot accept liability for any loss injury or damage which may result from its use. Data given in this Safety Data Sheet is solely for the guidance in safe handling and use of the product by customers - they do not constitute a specification. Customers are reminded that there may be applications of our products which are protected by patent, under which they have no rights whatsoever. If any difficulties should arise, we will be happy to discuss them. Customers are encouraged to carry out their own tests. before using any product, read the label carefully.

Issued By: G. Brown / D. Stevenson - Date:8th December 1995

Appendix E CONVERSION FACTORS

Dynamic Viscosity Units Conversion		
To Convert From:	**To:**	**Multiply By:**
$(lb_f\text{-sec})/ft^2$	Pa-sec	4.788 026 e+01
$(lb_f\text{-sec})/in^2$	Pa-sec	6.894 757 e+03
$(kg_f\text{-sec})/m^2$	Pa-sec	9.806 650 e+00
Poise	Pa-sec	1 e-01
Centipoises	Pa-sec	1 e-03
$lb_f/(ft\text{-sec})$	Pa-sec	1.488 164 e+00
$lb_f/(ft\text{-hr})$	Pa-sec	4.133 789 e-04
$(dyne\text{-sec})/cm^2$	Pa-sec	1.0 e-01

Pipe Modulus Units Conversion		
To Convert From:	**To:**	**Multiply By:**
lb_f/in^2	kPa	6.894 757 e+00

Length Units Conversion		
To Convert From:	**To:**	**Multiply By:**
Feet	meters	3.048 e-01
Inch	meters	2.54 e-02

Temperature Units Conversion		
To Convert From:	**To:**	**Multiply By:**
degree F	degree C	$T_C = (T_F - 32)/1.8$
degree C	degree F	$T_F = (1.8 * T_C)+32$

Copyright © 2006 CiDRA Corporation

Appendix F PHYSICAL PROPERTIES OF WATER

Water at 14.7 psia (sea level)			
Temp (degC)	Sp Grav	SOS (ft/s)	Viscosity (Pa*s)
0	1.000	4601.2	1.7909E-03
5	1.000	4679.0	1.5181E-03
10	1.000	4748.3	1.3059E-03
15	0.999	4809.5	1.1375E-03
20	0.998	4863.3	1.0016E-03
25	0.997	4910.4	8.9008E-04
30	0.996	4951.3	7.9735E-04
35	0.994	4986.4	7.1932E-04
40	0.992	5016.1	6.5298E-04
45	0.990	5040.8	5.9607E-04
50	0.988	5060.9	5.4685E-04
55	0.986	5076.7	5.0398E-04
60	0.983	5088.5	4.6640E-04
65	0.981	5096.5	4.3326E-04
70	0.978	5100.9	4.0389E-04
75	0.975	5101.9	3.7774E-04
80	0.972	5099.8	3.5435E-04
85	0.969	5094.7	3.3334E-04
90	0.965	5086.8	3.1441E-04
95	0.962	5076.1	2.9728E-04
99.98	0.958	5062.9	2.8180E-04

Water at 24.7 psia (10 psig)			
Temp (degC)	Sp Grav	SOS (ft/s)	Viscosity (Pa*s)
0	1.000	4601.5	1.7907E-03
5	1.000	4679.4	1.5180E-03
10	1.000	4748.6	1.3058E-03
15	0.999	4809.9	1.1375E-03
20	0.998	4863.7	1.0016E-03
25	0.997	4910.8	8.9007E-04
30	0.996	4951.7	7.9734E-04
35	0.994	4986.8	7.1932E-04
40	0.992	5016.5	6.5298E-04
45	0.990	5041.2	5.9608E-04
50	0.988	5061.4	5.4686E-04
55	0.986	5077.2	5.0399E-04
60	0.983	5088.9	4.6641E-04
65	0.981	5096.9	4.3328E-04
70	0.978	5101.3	4.0391E-04
75	0.975	5102.4	3.7776E-04
80	0.972	5100.3	3.5437E-04
85	0.969	5095.2	3.3336E-04
90	0.965	5087.3	3.1443E-04
95	0.962	5076.6	2.9730E-04
100	0.958	5063.3	2.8176E-04

Water at 64.7 psia (50 psig)			
Temp (degC)	Sp Grav	SOS (ft/s)	Viscosity (Pa*s)
0	1.000	4603.0	1.7900E-03
5	1.000	4680.9	1.5176E-03
10	1.000	4750.1	1.3055E-03
15	0.999	4811.3	1.1373E-03
20	0.998	4865.2	1.0015E-03
25	0.997	4912.3	8.9000E-04
30	0.996	4953.2	7.9731E-04
35	0.994	4988.3	7.1932E-04
40	0.992	5018.1	6.5300E-04
45	0.990	5042.8	5.9611E-04
50	0.988	5063.0	5.4691E-04
55	0.986	5078.8	5.0405E-04
60	0.983	5090.6	4.6647E-04
65	0.981	5098.6	4.3334E-04
70	0.978	5103.0	4.0398E-04
75	0.975	5104.1	3.7783E-04
80	0.972	5102.1	3.5444E-04
85	0.969	5097.0	3.3343E-04
90	0.965	5089.1	3.1450E-04
95	0.962	5078.5	2.9737E-04
100	0.959	5065.3	2.8183E-04

Water at 114.7 psia (100psig)			
Temp (degC)	Sp Grav	SOS (ft/s)	Viscosity (Pa*s)
0	1.000	4604.8	1.7892E-03
5	1.000	4682.7	1.5170E-03
10	1.000	4751.9	1.3051E-03
15	0.999	4813.2	1.1371E-03
20	0.999	4867.1	1.0013E-03
25	0.997	4914.2	8.8992E-04
30	0.996	4955.1	7.9728E-04
35	0.994	4990.3	7.1932E-04
40	0.993	5020.0	6.5303E-04
45	0.991	5044.8	5.9616E-04
50	0.988	5065.0	5.4697E-04
55	0.986	5080.9	5.0412E-04
60	0.984	5092.7	4.6655E-04
65	0.981	5100.7	4.3342E-04
70	0.978	5105.2	4.0406E-04
75	0.975	5106.4	3.7792E-04
80	0.972	5104.3	3.5453E-04
85	0.969	5099.3	3.3352E-04
90	0.966	5091.5	3.1459E-04
95	0.962	5080.9	2.9747E-04
100	0.959	5067.7	2.8193E-04

Reference: E.W. Lemmon, M.O. McLinden and D.G. Friend, "Thermophysical Properties of Fluid Systems" in NIST Chemistry WebBook, NIST Standard Reference Database Number 69, Eds. P.J. Linstrom and W.G. Mallard, March 2003, National Institute of Standards and Technology, Gaithersburg MD, 20899 (http://webbook.nist.gov).

Copyright © 2006 CiDRA Corporation

Appendix G END USER LICENSE AGREEMENT

END USER LICENSE AGREEMENT

You have acquired a device ("DEVICE") that includes software licensed by CiDRA Corporation ("CiDRA") from an affiliate of Microsoft Corporation ("MS"). Those installed software products of MS origin, as well as associated media, printed materials, and "online" or electronic documentation "(SOFTWARE") are protected by international intellectual property laws and treaties. Manufacturer, MS and its suppliers (including Microsoft Corporation) own the title, copyright, and other intellectual property rights in the SOFTWARE. The SOFTWARE is licensed, not sold. All rights reserved.

This EULA is valid and grants the end-user rights ONLY if the SOFTWARE is genuine and a genuine Certificate of Authenticity for the SOFTWARE is included. For more information on identifying whether your software is genuine, please see http://www.microsoft.com/piracy/howtotell.

IF YOU DO NOT AGREE TO THIS END USER LICENSE AGREEMENT ("EULA"), DO NOT USE THE DEVICE OR COPY THE SOFTWARE. INSTEAD, PROMPTYLY CONTACT CiDRA FOR INSTRUCTIONS ON RETURN OF THE UNUSED DEVICE(S) FOR A REFUND. **ANY USE OF THE SOFTWARE, INCLUDING BUT NOT LIMITED TO USE ON THE DEVICE, WILL CONSTITUTE YOUR AGREEMENT TO THIS EULA (OR RATIFICATION OF ANY PREVIOUS CONSENT).**

GRANT OF SOFTWARE LICENSE. This EULA grants you the following license:

You may use the SOFTWARE only on the DEVICE.

Restricted Functionality. You are licensed to use the SOFTWARE to provide only the limited functionality (specific tasks or processes) for which the DEVICE has been designed and marked by CiDRA. This license specifically prohibits any other use of the software programs or functions, or inclusion of additional software programs or functions that do not directly support the limited functionality on the DEVICE. Notwithstanding the foregoing, you may install or enable on a DEVICE, systems utilities, resource management or similar software solely for the purpose of administration, performance enhancement and/or preventive maintenance of the DEVICE.

If you use the DEVICE to access or utilize the services or functionality of Microsoft Windows Server products (such as Microsoft Windows Server 2003), or use the DEVICE to permit workstation or computing devices to access or utilize the services or functionality of Microsoft Windows Server products, you may be required to obtain a Client Access License for the DEVICE and/or each such workstation or computing device. Please refer to the end user license agreement for your Microsoft Windows Server product for additional information.

NOT FAULT TOLERANT. THE SOFTWARE IS NOT FAULT TOLERANT. CiDRA HAS INDEPENDENTLY DETERMINED HOW TO USE THE SOFTWARE IN THE DEVICE, AND MS HAS RELIED UPON CiDRA TO CONDUCT SUFFICIENT TESTING TO DETERMINE THAT THE SOFTWARE IS SUITABLE FOR SUCH USE.

NO WARRANTIES FOR THE SOFTWARE. THE SOFTWARE is provided "AS IS" and with all faults. THE ENTIRE RISK AS TO SATISFACTORY QUALITY, PERFORMANCE, ACCURACY, AND EFFORT (INCLUDING LACK OF NEGLIGENCE) IS WITH YOU. ALSO, THERE IS NO WARRANTY AGAINST INTERFERENCE WITH YOUR ENJOYMENT OF THE SOFTWARE OR AGAINST INFRINGEMENT. **IF YOU HAVE RECEIVED ANY WARRANTIES REGARDING THE DEVICE OR THE SOFTWARE, THOSE WARRANTIES DO NOT ORIGINATE FROM, AND ARE NOT BINDING ON, MS.**

No Liability for Certain Damages. **EXCEPT AS PROHIBITED BY LAW, MS SHALL HAVE LIABILITY FOR ANY INDIRECT, SPECIAL, CONSEQUENTIAL OR INCIDENTAL DAMAGES ARISING FROM OR IN CONNECTION WITH THE USE OR PERFORMANCE OF THE SOFTWARE. THIS LIMITATION SHALL APPLY EVEN IF ANY REMEDY FAILS OF ITS ESSENTIAL PURPOSE. IN NO EVENT SHALL MS BE LIABLE FOR ANY AMOUNT IN EXCESS OF U.S. TWO HUNDRED FIFTY DOLLARS (U.S. $250.00).**

Restricted Uses. The SOFTWARE is not designed or intended for use or resale in hazardous environments requiring fail-safe performance, such as in the operation of nuclear facilities, aircraft navigation or communication systems, air traffic control, or other devices or systems in which a malfunction of the SOFTWARE would result in foreseeable risk of injury or death to the operator of the device or system, or to others.

Limitations on Reverse Engineering, Decompilation, and Disassembly. You may not reverse engineer, decompile, or disassemble the SOFTWARE, except and only to the extent that such activity is expressly permitted by applicable law notwithstanding this limitation.

SOFTWARE as a Component of the DEVICE – Transfer. This license may not be shared, transferred to or used concurrently on different computers. The SOFTWARE is licensed with the DEVICE as a single integrated product and may only be used with the DEVICE. If the SOFTWARE is not accompanied by a DEVICE, you may not use the SOFTWARE. You may permanently transfer all of your rights under this EULA only as part of a permanent sale or transfer of the DEVICE, provided you retain no copies of the SOFTARE. If the SOFTWARE is an upgrade, any transfer must also include all prior versions of the SOFTWARE. This transfer must also include the Certificate of Authenticity label. The transfer may not be an indirect transfer, such as a consignment. Prior to the transfer, the end user receiving the SOFTWARE must agree to all the EULA terms.

Consent to Use of Data. You agree that MS, Microsoft Corporation and their affiliates may collect and use technical information gathered in any manner as part of product support services related to the SOFTWARE. MS Microsoft Corporation and their affiliates may use this information solely to improve their products or to provide customized services or technologies to you. MS, Microsoft Corporation and their affiliates may disclose this information to others, but not in a form that personally identifies you.

Internet Gaming/Update Features. If the SOFTWARE provides, and you choose to utilize, the Internet gaming or update features within the SOFTWARE, it is necessary to use certain computer system, hardware, and software information to implement the features. By using these features, you explicitly authorize MS, Microsoft Corporation and/or their designated agent to use this information solely to improve their products or to provide customized services or technologies to you. MS or Microsoft Corporation may disclose this information to others, but not in a form that personally identifies you.

Internet-Based Services Components. The SOFTWARE may contain components that enable and facilitate the use of certain Internet-based services. You acknowledge and agree that MS Microsoft Corporation or their affiliates may automatically check the version of the SOFTWARE and/or its components that you are utilizing and may provide upgrades or supplements to the SOFTWARE that may be automatically downloaded to your DEVICE. Microsoft Corporation or their affiliates do not use these features to collect any information that will be used to identify you or contact you. For more information about these features, please see the privacy statement at http://go.microsoft.com/fwlink/?LinkId=25243

Links to Third Party Sites. You may link to third party sites through the use of the SOFTWARE. The third party sites are not under the control of MS or Microsoft Corporation, and MS or Microsoft are not responsible for the contents of any third party sites, any links contained in third party sites, or any changes or updates to third party sites. MS or Microsoft Corporation is not responsible for webcasting or any other form of transmission received from any third party sites. MS or Microsoft Corporation are providing these links to third party sites to you only as a convenience, and the inclusion of any link does not imply an endorsement by MS or Microsoft Corporation of the third party site.

Notice Regarding Security. To help protect against breaches of security and malicious software, periodically back up your data and system information, use security features such as firewalls, and install use security updates.

No Rental /Commercial Hosting. You may not rent, lease, lend or provide commercial hosting services with the SOFTWARE to others.

Separation of Components. The SOFTWARE is licensed as a single product. Its component parts may not be separated for use on more than one computer.

Additional Software/Services. This EULA applies to updates, supplements, add-on components, product support services, or Internet-based services components ("Supplemental Components"), of the SOFTWARE that you may obtain from CiDRA, MS, Microsoft Corporation or their subsidiaries after the date you obtain your initial copy of the SOFTWARE, unless you accept updated terms or another agreement governs. If other terms are not provided along with such Supplemental Components and the supplemental Components are provided to you by MS Microsoft Corporation or their subsidiaries then you will be licensed by such entity under the same terms and conditions of this EULA, except that (i) MS Microsoft Corporation or their subsidiaries providing the Supplemental Components will be the licensor with respect to such Supplemental Components in lieu of the CiDRA for the purposes of the EULA and (ii) TO THE MAXIMUM EXTENT PERMITTED BY APPLICBLELAWE, THE SUPPLEMENTAL COMPOENTS AND ANY (IF ANY) SUPPORT SERVIES RELATED TO THE SUPPLEMENTAL COMPOENTS ARE PROVIDED AS IS AND WITH ALL FAULTS. ALL OTHER DISCLAIMERS, LIMITATION OF DAMAGES, AND SPECIAL PROVISIONS PROVIDED BELOW AND;OR OTHERWISE WITH THE SOFTWARE SHALL APPLY TO DAMAGES, AND SPECIAL PROVISIONS PROVIDED BELOW AND/OR OTHERWISE WITH THE SOFTWARE HWSALL APPLY TO SUCH SUPPLEMENT COMPONENTS. MS Microsoft Corporation or their subsidiaries reserve the right to discontinue any Internet-based services provided to you or made available to you through the use of the SOFTWARE.

Recovery Media. If SOFTWARE is provided by CiDRA on separate media and labeled "Recovery Media" you may use the Recovery Media solely to restore or reinstall the SOFTWARE originally installed on the DEVICE.

Backup Copy. You may make one (1) backup copy of the SOFTWARE. You may use this backup copy solely for your archival purposes and to reinstall the SOFTWARE on the DEVICE. Except as expressly provided in this EULA or by local law, you may not otherwise make copies of the SOFTWARE, including the printed materials accompanying the SOFTWARE. You may not loan, rent, lend or otherwise transfer the backup copy to another user.

End User Proof of License. If you acquired the SOFTWARE on a DEVICE, or on a compact disc or other media, a genuine Microsoft "Proof of License"/Certificate of Authenticity label with a genuine copy of the SOFTWARE identifies a licensed copy of the SOFTWARE. To be valid, the label must be affixed to the DEVICE, or appear on CiDRA's software packaging. If you receive the label separately other than from CiDRA, it is invalid. You should keep the label on the DEVICE or packaging to prove that you are licensed to use the SOFTWARE.

Product Support. Product support for the SOFTWARE is not provided by MS, Microsoft Corporation, or their affiliates or subsidiaries. For product support, please refer to CiDRA support number provided in the documentation for the DEVICE. Should you have any questions concerning this EULA, or if you desire to contact CiDRA for any other reason, please refer to the address provided in the documentation for the DEVICE.

Termination. Without prejudice to any other rights, CiDRA may terminate this EULA if you fail to comply with terms and conditions of this EULA. In such event, you must destroy all copies of the SOFTWARE and all of its component parts.

EXPORT RESTRICTIONS. You acknowledge that SOFTWARE is subject to U.S. and European Union export jurisdiction. You agree to comply with all applicable international and national laws that apply to the SOFTWARE, including U.S. Export Administration Regulations, as well as end-user, end-use and destination restrictions issued by U.S. and other governments. For additional information see http://www.microsoft.com/exporting/.

Copyright © 2006 CiDRA Corporation

Appendix H SPARE PARTS LIST

The following is a list of commonly spared parts for *SONARtrac*™ systems. Contact CiDRA Customer Support for items not found on this list, and for price and availability.

Kit Part Number	Title	Description
S-20170-01	Kit, Spare Fiberglass Cover Bolts	Replacement set of 13 stainless steel bolts (tin plated), washers, lock-washers and lock-nuts used to on fiberglass cover assemblies
S-20352-TAB	Spare Band Kit, Stainless Steel Cover	Replacement stainless steel bands and buckles used to secure the boot gasket on stainless steel cover assemblies. The –TAB designates the cover (pipe) size. Example, S-20352-20 is replacement bands and buckles for a 20-inch cover. Specify cover size when ordering.
S-20574-TAB	Fiberglass Cover Replacement Seals	Replacement EPTFE seals used on fiberglass cover assemblies. The S-20574-08-02 is used on fiberglass covers 8-inch to 2-inch size. The S-20574-16-10 is used on fiberglass covers 16-inch to 10-inch size.
S-20592-TAB	Spare Sensor Band Tension Screw and Spring Set	Replacement set of 9 ultra coated screws, stop washers, spring washers and retaining rings; hex power bit; spiral tap (used to clean / chase screw hole threads) used on sensor bands. S-20592-01 is used on P/N 20380-ALL SIZE sensor bands; S-20592-02 is used on P/N 20409-ALL SIZE sensor bands S-20592-06 is used on P/N 20690-ALL SIZE sensor bands without compliant sheet S-20292-07 is used on P/N 20690-ALL SIZE sensor bands with compliant sheet Contact CiDRA Customer Support for all other sensor bands or with questions
S-20618-TAB	Spare Sensor Band Screw Gap Gauge and Sensor Band Shorting Plug	Replacement spring gap gauge and sensor band shorting plug. S-20618-01 contains spring gap gauge for use on sensor band P/N 20380-ALL: SIZES S-20618-02 contains spring gap gauge for use on sensor band P/N 20409-ALL: SIZES S-20618-03 contains a spring gap gauge for use on sensor band P/N 20690-ALL SIZES and P/N 20686-ALL SIZES Contact CiDRA Customer Support for all other sensor bands or with questions
S-20621-01	Spare Hardware and Gasket Replacement Kit, Stainless Steel Cover	Replacement stainless steel cover flange gaskets, spacers, cover bolt / washer / nut sets, splice protector plates and joining compound.
S-20714-TAB	Spare Kit, Electronics Access Cover Screw and Washer Assembly	Replacement self sealing screws with viton o-rings and retaining washers for use on the electronics access cover.

Copyright © 2006 CiDRA Corporation

Appendix I DIRECTIVE 2002/96/EC ON WASTE ELECTRICAL AND ELECTRONIC EQUIPMENT (WEEE)

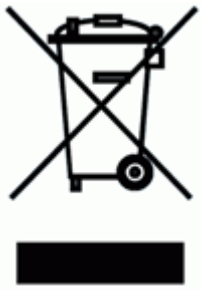

This symbol pictured here and on the transmitter of your SONARtrac system (if purchased after August 13, 2005), indicates that at its end-of-life your SONARtrac system is considered to be Waste Electrical and Electronic Equipment (WEEE) in applicable countries of the European Union. Where applicable WEEE must be kept separate from other municipal waste streams and returned for proper disposal to the producer or a licensed WEEE recycler. Since slightly different WEEE laws have been implemented throughout the European Union, once your SONARtrac system has reached its end-of-life, contact CiDRA for information regarding disposal policies and procedures.

For additional information and to obtain return instructions please go to the CiDRA website at http://www.cidra.com/recycling

Copyright © 2006 CiDRA Corporation

SONARtrac™

CiDRA Corporation

50 Barnes Park North
Wallingford, CT 06492

(In U.S.): 877-cidra77
Tel: 203-265-0035
Fax: 203-294-4211

Visit CiDRA Online at: www.cidra.com

CiDRA

P/N 20675-01, Rev. 02